International Journal of Engineering & Technology, 7 (2.8) (2018) 156-160

International Journal of Engineering & Technology

Website: www.sciencepubco.com/index.php/IJET

Research Paper

Precision and repeatability analysis of a motion analysis system for traction therapy

Se Jin Park [1], Murali Subramaniyam [2] *, Seung Nam Min [3], Seoung Eun Kim [4], Sikyung Kim [5]

[1] Center for Medical Metrology, Korea Research Institute of Standards and Science, Daejeon, South Korea
[2] Department of Mechanical Engineering, SRM Institute of science and Technology, Kattankulathur, Chennai, India
[3] Department of Fire Safety Management, Shinsung University, Dangjin-si, South Korea
[4] Center for Sports Science in Chungnam, Chungnam Sports Council, South Korea
[5] Kongju National University, Cheonan, Chungnam, South Korea
**Corresponding author E-mail: murali.subramaniyam@gmail.com*

Abstract

Neck pain or cervical pain is most common in individuals who are all working in seated postures for prolonged period of time, example computer users. The pain caused by extreme postural positions including forward head postures and extension angle maintained in cervical. The use of cervical vertebra traction therapy has increased as a part of rehabilitation medicine. However, lack of usability standard in this traction therapy i.e., the exact instructions on how to choose the traction force and location are unclear. To fix this issue, first, the cervical spine traction system analysing the change of cervical spine depending on the traction location has been investigated. Motion analysis systems are widely used to measure the changes in the body part movement. However, the precision and repeatability of motion analysis systems are not much studied. In this paper, the precision and repeatability of a three-dimensional (3D) motion analysis system (i.e., NDI's Optotrak Certus (OC)) is evaluated with developed 3D robot for traction therapy as an application example. The 3D robot quantitated the accuracy and precision of the system regarding angle and distance. Angle and distance among markers showed good agreement between measurements, and comparable measures of precision reported. Experimental results demonstrate a measure of precision and repeatability for the movement of the patients on the cervical traction system; hence the repeatability was satisfactory.

Keywords: *Medical Device; Extension Therapy; Rehabilitation; Cervical Spine.*

1. Introduction

Since 2000, the number of young people in the incidence of the cervical disease sharply increased. A cervical spine disc center of a Korean hospital has reported that the number of patients with the cervical disease has increased about five times from 2000 to 2004 [1]. The symptoms of neck pain and stiffness caused cervical neuropathy and reported that 80% of the cervical disease is this illness. The most common symptoms of this disease are that difficult for the patients to arch back their head turning from side to side, sometimes there are the bones moving sounds [2-4]. The investigation shows that the vast majority of patients with a degenerative disorder of the cervical spine is the median ages over 40 years with more than half (56.3%) in 2000. There is a report showing the 70% higher incidence of cervical spine disorder and the 51% of the adult feeling of powerlessness on the cervical spine. Intervertebral discs in between the bones of the vertebrae help to cushion the bones and allow for smooth and painless movement. Symptoms can arise when part of the disc material begins to protrude, known as a disc herniation, or when the disc begins to change, known as disc degeneration [5-7]. Treatment for a herniated or degenerated disc includes medications, physical therapy, spinal injections or surgery. The success rate for this surgery is quite high about 80-90% and the success rate of conservative treatment without surgery, medication or injection therapy, and physical therapy is about 70-80% [8]. The cervical vertebrae patient was increased 12.2% in 2004 compared with the year 2000 because of the wrong long-term attitude according to the increase of the computer and internet [1]. So the use of cervical vertebra traction has increased as a part of rehabilitation medicine and clinical pathology of the cervical vertebrae patient. However, the insufficient standard of the way of use of cervical vertebrae traction cause inconvenience to the user.

Recently, the 3D motion analysis systems widely used in the field of medical equipment analysis. A lot of systems are available such as VICON, Optotrak, Ariel, Motus, and Elite plus, etc. The precision of any measurement system is an important parameter to evaluate the performance of that system. It has been found that the 3D motion analysis systems are always related to some errors and therefore, always only obtained values. Hence, the measurement without a corresponding uncertainty and precision is incomplete.

Accuracy is closely related to precision, also called reproducibility or repeatability, the degree to which further measurements or calculations will show the same or similar results. The results of a measurement can be either accurate but not precise or precise but not accurate, neither or both. Precision is the degree of veracity while precision is the degree of reproducibility [9-11]. A result is called valid if it is both accurate and precise. In case of OC precision refers to the angles and distance used between markers in the medical equipment analysis. The reliability test of motion analysis system in the aspects of precision and repeatability was performed regarding the frame-to-frame repeatability of the measurement [12]. The landmark, distance between markers and angle studies investigated using Optotrak system and suggested about the reliability of motion analysis systems [9], [10], [13], [14].

In this paper, the precision and the repeatability of OC tested using a 3D robot by calculating different parameters including Coefficient of Multiple Correlation (CMC) analysis based on marker angle, volume, circular movement and object moving at different speeds. Furthermore, the traction therapy system used in hospitals investigated with the OC and 3D motion analysis systems. The traction systems widely used, however, the exact instructions on how to choose the location of the traction are unclear. The cervical spine traction system analysing the change of cervical spine depending on the traction location investigated to fix this issue.

2. Material and methods

A 3D robot (Fig.1), which can move in the X, Y, and Z coordinate in real time simultaneously has been designed in-house. The 3D robot utilizes three AC servo motors for each axis to move in the desired direction. The highest limit for movement in X, Y and Z axis are 50, 30 and 50 cm, respectively. There is a flat plate available which is mounted on the Z axis to be used later for placing markers. There is a base available where the power module and transmitter are placed, and the 3D robot with AC servo motor is placed at some height above the base on a flat platform.

The 3D motion analysis was performed to investigate the cervical changes of patient positioning during traction with a cervical vertebrae traction system. The electronic controlled cervical tractor (Fig. 2) was employed for traction, and the 3D motion analysis equipment, the NDI's Optotrak (accuracy: 0.01mm), were used to achieve the 3D position of patient positioning. The experiments were performed in aspects of depth of the sensors, precision, and repeatability.

a) Depth of the sensors

For the measurement of the depth of the sensors, we have utilized one static marker at a certain distance from the sensors of the OC. The measured maximum and minimum depth of the sensors were at 1.5 and 6.9 m, respectively, although the manufacturer recommended between 2 and 6 m.

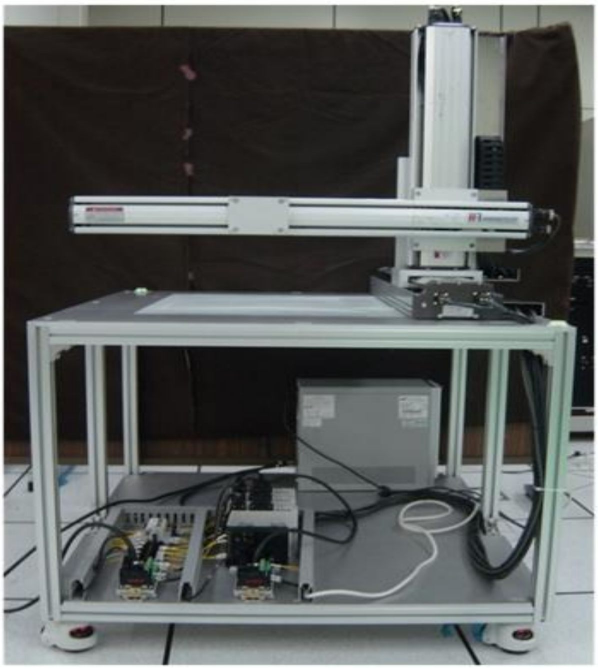

Fig. 1: An External View of 3D Robot.

Fig. 2: Cervical Vertebrae Tractor.

b) Precision analysis

The OC system with a strobe along with four markers utilized for the precision experiment. One marker placed in one corner of the flat platform where the origin of the 3D robot was placed as shown in Fig. 3. It can also be seen that the marker 1 is all the way static and the other three markers, that is, markers 2, 3 and four can move whenever the plate is moving. The absolute distance of the markers 2 and 4 and also the angle formed by markers 2 and four concerning the static marker one were measured. Subsequently, the distance between the markers 2 and four both in static and dynamic condition by taking three trials using the OC system was measured. The angle data also obtained for three trails from the OC.

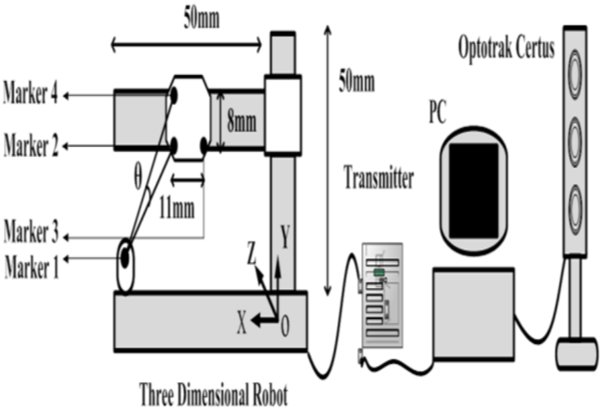

Fig. 3: Experimental Setup for Precision Analysis.

c) Repeatability analysis

The CMC approach was used for the repeatability analysis, being developed by Matlab program [15]. The repeatability of data acquired by a measurement system is a major factor in experimental design [11], [16]. Synonyms commonly used to describe repeatability are reliability, stability, consistency, and predictability [11], [17]. Any measurement device is called a reliable system if it can measure the same values in the same quantities with repeatability for its desired application. CMC is a powerful measure to examine the repeatability of waveform data [18-20]. The repeatability of any measured data analyzed accurately by the CMC approach [20], [21]. When the waveform of every dataset is similar to each other, the CMC is affected by many factors such as the number of sample points, number of repetitions of measurement, measurement error, and the types of variables being used.

The CMC values can be interpreted as follows:

- Values ranging from 0.00 to 0.25 (Little or no similarity)
- Values ranging from 0.25 to 0.50 (Fair degree of similarity)
- Values ranging from 0.50 to 0.75 (Moderate similarity)
- Values ranging from 0.75 to 1 (High similarity)

The CMC analysis can provide us with the information of repeatability of measured data sets, but it can't show if there is an error in the size of measurement. A useful statistical technique that addresses this issue is the Coefficient of Variation (CV). In case of angle repeatability analysis, the experimental setup was same as in precision analysis. The angle variations obtained from OC for three trials were later used for repeatability analysis. For circular movement repeatability analysis, the position of the marker two was utilized. The same circular movement was repeated three times which were later utilized in the repeatability analysis. It may be mentioned here that the designed 3D robot can move to form a circle in the two-dimensional plane. For the variation of volume, a rigid body and eight markers (Fig. 4) were used. Four markers (Markers 1, 2, 3 and 4) were placed in four corners of the flat plate of the 3D robot in the form of a rectangle having the same length and width as the rigid body dimension. The other four markers (Markers 5, 6, 7 and 8) were placed in the four corners of the rigid body. Whenever the plate was moving along the Z axis, the volume formed by the eight markers between the rigid body and the flat plate was also changing. The repeatability analysis performed using the position of the markers calculated, the volume obtained from three trails using the OC. In the repeatability analysis, calculated the CMC, CV (%) and the SD values using Matlab for variation in angle, volume, circular movement and moving object at different speed.

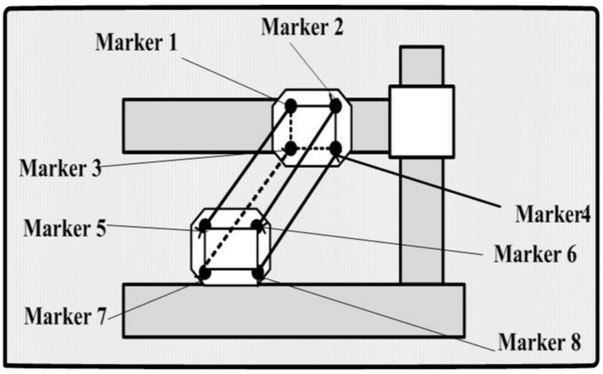

Fig. 4: Experimental Setup for Repeatability Analysis.

d) Cervical vertebrae traction analysis

The entire procedure was explained to the subjects before the experiment started, they fully aware the purpose of the experiment and how the experiment would be performed. The experiment involves tightening specific muscle for 10 seconds, then relaxing for 10 seconds. This sequence would be repeated for ten times to enable the subject to identify muscle tension and relaxation. Furthermore, after taking enough rest and changing the vertical position relative to the distance of around 5° from side to side, the second traction was performed in the same way. Depending on the location of the cervical traction, the cervical spine movements of the subject were measured by the 3D motion analysis. The selected sensor locations and the structure of cervical vertebra are shown in Fig. 5(a) and 5(b).

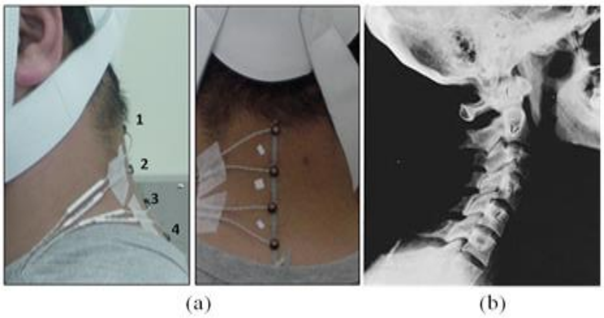

Fig. 5: 3D Sensor Position on the Neck (A) Photographs of Sensor Location (B) Structure of Cervical Vertebra.

3. Results

Neck pain or cervical pain is most common in individuals who are all working in seated postures including computer users [22-26]. The cervical pain caused by extreme postural positions including forward head postures and upper cervical extension angle [27-29]. The use of cervical vertebra traction has increased as a part of rehabilitation medicine. However, the insufficient standard of the way of use of cervical vertebrae traction cause inconvenience to the user. In order to increase the usability standard, measuring the position and angle of cervical spine is important. Motion analysis systems are widely used to measure the changes in the body part motion [30-31]. However, the precision and repeatability of motion analysis systems are not studied much. In this paper, the precision and repeatability of a three-dimensional (3D) motion analysis system (i.e., NDI's Optotrak Certus (OC)) is evaluated with 3D robot for traction therapy as an application example. The results are presented here.

a) Precision test for distance between markers

For the precision test, three trails of position data were taken using OC for both static and dynamic conditions and calculated the average distance between markers 2 and 4 for each trail as well as an error (%) and SD values. The values are shown in table 1 and 2 for static and dynamic conditions, respectively.

Table 1: Distance between Marker 2 and 4 in Static Condition

Trials	Average (mm)	Absolute (mm)	Error (%)	SD (mm)
1	79.54467	80	0.569	0.004345
2	79.54373	80	0.57	0.002
3	79.54517	80	0.57	0.0029

Table 2: Distance between Marker 2 and 4 in Dynamic Condition

Trials	Average (mm)	Absolute (mm)	Error (%)	SD (mm)
1	79.54203	80	0.572	0.0058
2	79.5373	80	0.578	0.0086
3	79.5392	80	0.576	0.0067

b) Precision test for angles

For the precision test to determine the angle between markers 2 and 4 with marker one as a reference, three trails of angular data were taken using the OC in a static condition. The average angle, error (%) and SD values are shown in Table 3 for the static condition.

Table 3: Angle between Markers 2 and 4 in Static Condition

Trials	Average (deg)	Absolute (deg)	Error (%)	SD (deg)
1	9.33	9.72	4.01	0.000161
2	9.32991	9.72	4.013	0.000134
3	9.3299	9.72	4.013	0.000192

c) Repeatability analysis

A repeatability analysis was performed for several trails concerning the angle variation, position of the sensors and object moving at different speeds. Whenever the plate was moved the angle varied between marker 2 and 4 concerning static marker 1, the angle variation was obtained from the OC for three trails. The measured angle variation to the corresponding frame number is shown in Fig.6 (a) and (b). It can be seen that the angle value started decreasing from 9.6° to 6.7° and again increasing to 9.6° when repetitive movement performed. The CMC, CV (%) and SD values found were 0.9901, 1.2634 and 0.1025 respectively, which represent better repeatability and less error.

d) 3D Position data analysis for cervical traction

The cervical position data about patient positioning during the cervical traction were collected using 3D motion analysis equipment. Based on these experimental data, the measuring distance changes depending on the position and the variation of sensor location in measurement position have been investigated.

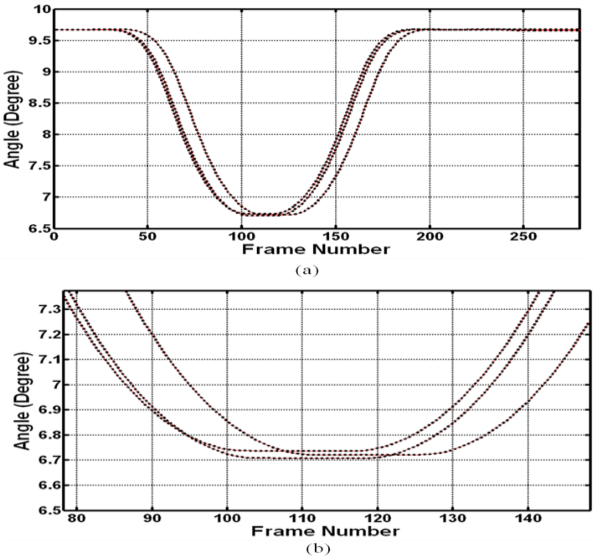

Fig. 6: Angle Data from Three Trails between Markers 2 and 4 (A) Variation of Angle between Markers 2 and 4 (B) A Partial Zoom View of Figure 6. (A).

e) Measuring distance changes depending on the position

The four sensors were placed on the subject neck between C1 to C7 location, as shown in Fig. 5 (a). The change in the distance was measured by the NDI's Optotrak for different positions namely normal, anterior, posterior, left and right. The measurement results of each position shown in Table 4. The experimental results demonstrate a larger change in the distance whole nearest C7 positions. Furthermore, it has been verified that varied more on the change of the right and left length than the change of the anterior and posterior. It has been confirmed that there was a most significant relaxation with a posterior traction on the rear side.

Table 4: The Sensor Distance as Location

Sensor location	1-2	2-3	3-4
normal	±0.731	±0.245	±0.071
anterior	±0.903	±0.696	±0.055
posterior	±0.825	±0.800	±0.066
left	±0.567	±0.287	±0.067
right	±0.490	±0.080	±0.037

f) Variation of sensor location in measurement position

The experiment was carried to examine the difference between left and right locations for the measurement as shown in Fig. 7. Based on the reference of C7, the skewed position in the right direction has more variation than the values of the left position (Table 4). Therefore, the best method is the cervical spine traction from slightly behind the subject's cervical spine under the even state. These results are consistent with the structural form of the cervical spine.

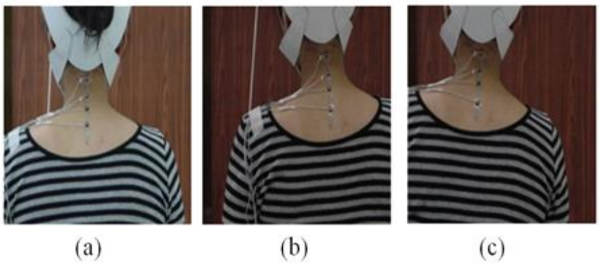
(a) (b) (c)

Fig. 7: Right and Left Pulling Scene from Tractor's Own Reference Position (A) Normal Position (B) 5° Right Skewed Position (C) 5° Left Skewed Position.

4. Discussion

The experimental results suggested that the OC exhibits very high precision and excellent repeatability for the measurement of distance, angle, and area. Those obtained results prove the better reliability of OC than is shown in the most other studies of motion analysis systems, as well as they are comparable to the information provided by the manufacturer, although they emphasize on accuracy and resolution more than precision and repeatability.

Moreover, the OC also has great repeatability. There was no significant difference in the measured data taken between sessions in either distance or angle measures. In the precision analysis for the distance between markers, the error (%) and the SD values were found between 0.569 ~ 0.57 and 0.002 ~ 0.0043 respectively for the static condition, whereas for the dynamic condition they were found as 0.572 ~ 0.578 and 0.0058 ~ 0.0086 respectively. In case of precision of angles between markers, the error (%) and SD values were found in between 4.01 ~ 4.013 and 0.000134 ~ 0.000192, respectively. In case of angle, it could be seen that the error was much more compared with distance.

Table 5: Summary of Repeatability Analysis

		CMC	CV (%)	SD
Speed (mm/sec)	Acceleration	0.9926	11.775	0.912635
	Constant	0.6275	1.2282	0.256041
	Deceleration	0.9855	22.203	0.914289
Angle (degree)		0.9901	1.2634	0.1025
Volume (m^3)		0.9999	1.4151	1.5 x 10-5
Circular Movement (m)	X axis	0.9949	2.8104	0.00944
	Y axis	0.9956	0.7761	0.008266

The repeatability analysis results are summarized in Table 5. For the angle repeatability analysis the CMC, CV (%) and SD values found were exhibited much better repeatability. The CMC, CV (%) and SD values for changing volume found were 0.9999, 1.4151 and 1.5 x 10-5 respectively. Later performed a circular movement in the X-Y plane for which analyzed the repeatability of the movement of the markers in the X and Y axis and the CMC, CV (%) and SD values were found as 0.9949, 2.8104 and 0.00944 for the X-axis and the Y-axis 0.9956, 0.7761 and 0.008266 respectively. Furthermore, the repeatability of the speed of an object moving at different speed was tested. The obtained the CMC, CV (%) and SD values as 0.9926, 11.7747, 0.912635 for acceleration stage; 0.6275, 1.2282, 0.256041 for constant speed; and 0.9855, 22.2025, 0.914289 for deceleration stage respectively.

Finally, the viewing area for the OC was compatible with the manufacturer's suggestion of a depth of 2 ~ 6 m. Despite the trials taken from the movement of the 3D robot, all the way the 3D robot was near to the center of the viewable area of the system. Now a day some people suggest the availability of noise in 3D data although we did not concern with this idea. Finally, all the CMC values are close to one that shows better repeatability; the CV values were low that shows less error in measurement and the SD values were also found very low. These results prove the reliability of the OC as a motion analysis system.

The present study corroborated the idea that OC is an effective motion analysis tool in assessing motion of an object since they show better precision and repeatability. Regardless of these measurements, for most of the motion analysis system's movement of the marker due to skin and landmarks are still the main issues to be considered. The results presented in this paper can be used for the improvement of the performance of the medical treatment systems.

5. Conclusions

The precision and repeatability of a motion analysis system evaluated, NDI OC considered in this paper as an example. With cervical traction as an application example, the accuracy and precision of the system regarding angle and distance quantitated using 3D robot. Angle and distance among markers showed good agreement between measurements, and comparable measures of precision were reported. Experimental results demonstrate a measure of precision and repeatability for the movement of the patients on the cervical traction system; hence the repeatability was satisfactory.

This study used only four sensors. Future, the research will be conducted via further subdivided sensor field and expanded the whole bust from the neck in advance. The results and approach presented in this paper can be used as method for assessing medical equipments and also method of assessing motional analysis systems for the reliable service of the products.

References

[1] Lee OJ, Kim HH, So KS, Kim SN, Cho NG. Clinical study on soft cervical disc herniation. The Acupuncture. 2004;21(4):85-92.

[2] Côté P, Cassidy JD, Carroll L. The Saskatchewan health and back pain survey: the prevalence of neck pain and related disability in Saskatchewan adults. Spine. 1998 Aug 1;23(15):1689-98. https://doi.org/10.1097/00007632-199808010-00015.

[3] HU Y, XIE H, YANG SH. Utilization of three-dimensional finite element method in spinal biomechanics [J]. Journal of Medical Biomechanics. 2006;3:017.

[4] YU HQ, GU SX, LI M, DING ZQ, YANG XM, FANG XT. Three-dimensional finite element model of the scoliotic spine for biomechanical study of scoliosis [J]. Journal of Medical Biomechanics. 2008;23(2):136-9.

[5] Patel AA, Whang PG, Vaccaro AR. Overview of computer-assisted image-guided surgery of the spine. InSeminars in Spine Surgery 2008 Sep 30 (Vol. 20, No. 3, pp. 186-194). WB Saunders.

[6] Traub J, Sielhorst T, Heining SM, Navab N. Advanced display and visualization concepts for image guided surgery. Journal of Display Technology. 2008 Dec 1;4(4):483-90. https://doi.org/10.1109/JDT.2008.2006510.

[7] Bovim G, Schrader H, Sand T. Neck pain in the general population. Spine. 1994 Jun 1;19(12):1307-9. https://doi.org/10.1097/00007632-199406000-00001.

[8] Lee H, Nicholson LL, Adams RD. Cervical range of motion associations with subclinical neck pain. Spine. 2004 Jan 1;29(1):33-40. https://doi.org/10.1097/01.BRS.0000103944.10408.BA.

[9] Li Q, Zamorano L, Jiang Z, Gong JX, Pandya A, Perez R, Diaz F. Effect of optical digitizer selection on the application accuracy of a surgical localization system—a quantitative comparison between the OPTOTRAK: and flashpoint tracking systems. Computer Aided Surgery. 1999 Jan 1;4(6):314-21.

[10] Richards JG. The measurement of human motion: a comparison of commercially available systems. Human movement science. 1999 Oct 31;18(5):589-602. https://doi.org/10.1016/S0167-9457(99)00023-8.

[11] Currier DP. Elements of research in physical therapy. Williams & Wilkins; 1984.

[12] Allard P, Stokes IA, Blanchi JP. Three-dimensional analysis of human movement. Human Kinetics Publishers; 1995.

[13] Glossop N, Hu R. Assessment of vertebral body motion during spine surgery. Spine. 1997 Apr 15;22(8):903-9. https://doi.org/10.1097/00007632-199704150-00014.

[14] States RA. Two simple methods for improving the reliability of joint center locations. Clinical Biomechanics. 1997 Sep 1;12(6):367-74. https://doi.org/10.1016/S0268-0033(97)00025-9.

[15] Lee RY. MatLab program for repeatability analysis of waveform data. Computer software]. Retrieve from http://biomech. brighton. ac. uk/help/cmc. 2006.

[16] Portney LG, Watkins MP. Foundations of clinical research: application to practice. Stamford, USA: Appleton & Lange. 1993.

[17] Hislop HJ. Modern instrumentation and its implications for physical therapy. Journal of the American Physical Therapy Association. 1963 Apr;43:257-62. https://doi.org/10.1093/ptj/43.4.257.

[18] Neter J, Kutner MH, Nachtsheim CJ, Wasserman W. Applied linear statistical models. Chicago: Irwin; 1996 Feb.

[19] Kadaba MP, Ramakrishnan HK, Wootten ME, Gainey J, Gorton G, Cochran GV. Repeatability of kinematic, kinetic, and electromyographic data in normal adult gait. Journal of Orthopaedic Research. 1989 Nov 1;7(6):849-60. https://doi.org/10.1002/jor.1100070611.

[20] Growney E, Meglan D, Johnson M, Cahalan T, An KN. Repeated measures of adult normal walking using a video tracking system. Gait & Posture. 1997 Oct 31; 6(2):147-62. https://doi.org/10.1016/S0966-6362(97)01114-4.

[21] Matsumoto N, Hong J, Hashizume M, Komune S. A minimally invasive registration method using surface template-assisted marker positioning (STAMP) for image-guided otologic surgery. Otolaryngology—Head and Neck Surgery. 2009 Jan; 140(1):96-102. https://doi.org/10.1016/j.otohns.2008.10.005.

[22] Dunleavy K, Neil J, Tallon A, Adamo DE. Reliability and validity of cervical position measurements in individuals with and without chronic neck pain. Journal of Manual & Manipulative Therapy. 2015 Sep 1; 23(4):188-96. https://doi.org/10.1179/2042618614Y.0000000070.

[23] Rossignol AM, Morse EP, Summers VM, Pagnotto LD. Video display terminal use and reported health symptoms among Massachusetts clerical workers. Journal of Occupational and Environmental Medicine. 1987 Feb 1;29(2):112-8.

[24] Szeto GP, Straker L, Raine S. A field comparison of neck and shoulder postures in symptomatic and asymptomatic office workers. Applied ergonomics. 2002 Jan 31;33(1):75-84. https://doi.org/10.1016/S0003-6870(01)00043-6.

[25] Szeto GP, Straker LM, O'Sullivan PB. A comparison of symptomatic and asymptomatic office workers performing monotonous keyboard work—1: neck and shoulder muscle recruitment patterns. Manual therapy. 2005 Nov 30;10(4):270-80. https://doi.org/10.1016/j.math.2005.01.004.

[26] Haughie LJ, Fiebert IM, Roach KE. Relationship of forward head posture and cervical backward bending to neck pain. Journal of Manual & Manipulative Therapy. 1995 Jan 1;3(3):91-7. https://doi.org/10.1179/jmt.1995.3.3.91.

[27] Shiau YY, Chai HM. Body posture and hand strength of patients with temporomandibular disorder. CRANIO®. 1990 Jul 1;8(3):244-51. https://doi.org/10.1080/08869634.1990.11678318.

[28] Silva AG, Punt TD, Sharples P, Vilas-Boas JP, Johnson MI. Head posture and neck pain of chronic nontraumatic origin: a comparison between patients and pain-free persons. Archives of physical medicine and rehabilitation. 2009 Apr 30;90(4):669-74. https://doi.org/10.1016/j.apmr.2008.10.018.

[29] States RA, Pappas E. Precision and repeatability of the Optotrak 3020 motion measurement system. Journal of medical engineering & technology. 2006 Jan 1;30(1):11-6. https://doi.org/10.1080/03091900512331304556.

[30] Mazumder MM, Kim S, Park SJ. Precision and repeatability analysis of Optotrak Certus as a tool for gait analysis utilizing a 3D robot. Journal of Engineering and Technology Research. 2011 Feb 28;3(2):37-43.

[31] Mazumder MM, Kim S, Park SJ, Lee J. Precision and repeatability analysis of Optotrak Certus as a tool for gait analysis. IFAC Proceedings Volumes. 2007 Jan 1;40(16):107-12.

[32] B. S. Sreekar Reddy, Pesaru Vigneshwar, E.V.Ratan Deepu, K.Naveenkumar, Dr.Ch. Ratnam, "A Hybrid Evolutionary Algorithm Approach to Multi-Objective Flexible Job shop Problem", International Innovative Research Journal of Engineering and Technology. Vol: 2, Issue: 4 June (2017).1-7.