International Journal of Engineering & Technology, 7 (1.1) (2018) 570-573

International Journal of Engineering & Technology

Website: www.sciencepubco.com/index.php/IJET

Research paper



Design and fabrication of portable laser cutting and engraving machine

P. Jamaleswara Kumar [1] *, A. Siva Sai Tarun [1], M. Gowtham [1], P. Thamma Rao [1], G. Yashwanth [1]

[1] *Department of Mechanical Engineering , K LEF , Green Fields, Vaddeswaram- 522502*
**Corresponding author E-mail: pjkumar@kluniversity.in*

Abstract

Now a days digital control technology is became more and more useful to run the machines like portable laser cutting and engraving machines that can cut on the different surface contingent upon the power of the laser diode. In this paper the fundamental goal is to design and fabricate the laser cutting and engraving machine which is convenient to controlled by the Arduino CNC. It is accessible and perfect utilization for small and medium scale industries. This model is small, simple to work, cost of manufacturing and to effortlessly transport from one work station to other work station.

Keywords: *Laser Module; Arduino; Stepper Motor; Eleksmaker.*

1. Introduction

Laser is truncated as "Light Amplification by Stimulated Emission of Radiation."
The laser is light emission lucid radiation. This implies it originates from a source (called a Resonator) that produces (transmits) radiation (light or even in the imperceptible range) of in-step floods of indistinguishable recurrence, stage, and polarization [1]. Laser light is by and large a tight wavelength light, there are lasers that produce an expansive range of light, or transmit diverse wavelengths of light all the while. Laser cutting innovation has been broadly utilized as a part of metal and non-metal material preparing, which incredibly reduces the handling time and cost and improves the nature of work piece. Present day laser turns into the awesome sword that would slice clean through iron as if it were mud [2]. Laser cutting is an innovation that uses a laser medium to cut materials and is ordinarily utilized for modern assembling and generation applications. Laser cutting works by coordinating the yield of a powerful laser most regularly through optics. The laser optics and CNC programming is utilized to coordinate the material or the laser pillar created. A run of the mill business laser for cutting materials would include a movement control framework to take after a CNC or G-code of the example to be cut into the material. The engaged laser pillar coordinated at the material, which at that point either liquefies, consumes, vaporizes away, leaving an edge with a fantastic surface wrap up [3-5]. Mechanical laser slicing machines are utilized to cut level sheet material and also basic and channelling materials in light of the application. Laser cutting is expert by the use of high power thickness vitality created from the engaged laser. Under the control of the PC, laser releases through heartbeat and a yield of high-recurrence beat laser frames a light emission specific recurrence and heartbeat width [6]. After conduction and reflection through the optical way and centred by centring focal point gathering, the beat laser shaft turns into an inconspicuous and high-vitality thickness flare, situated close to the surface zone to be prepared and afterward it melts or consumes the material in a minute. Each high-vitality laser heart-beat can sputter a fine opening in a moment. Under the control of the PC, laser head will move moderately and be situated by the chart along these lines to get the coveted shape [7]. Contrasted and the conventional cutting handling techniques, laser cutting has high cutting quality, speed, adaptability and extensive variety of utilization.

2. Theme of the paper

a) Decrease the extensive scale mechanical slicing machine to a little convenient lab hardware.
b) Diminish the cost of making models.
c) Usable for cutting paper, polystyrene and thin sheets, wood etc.
d) Portable Machine.

3. Experimental outcome

The advent of the Portable Laser Cutter is so simple and compact that it has made itself affordable than that of CO2 Laser Cutters and also to the Small-scale industries as well. This can bring about a revolution in today's technology related to manufacturing and production due to its ease of handling and versatility.
Eleksmaker:
The main objective of the ELEKSMAKER Software is to convert the graphical image into a G code language, it is the latest software which reduces the human effort to generate the code. When we import the required image in the format of Scalable Vector Graphics (SVG) the Eleksmaker converts into G- codes which is the help to locate the coordinates of the image. And also it give the required power to the steeper motors at specified time , the power of the laser also controlled by this software.

Copyright © 2018 P. Jamaleswara Kumar et al. This is an open access article distributed under the Creative Commons Attribution License, which permits unrestricted use, distribution, and reproduction in any medium, provided the original work is properly cited.

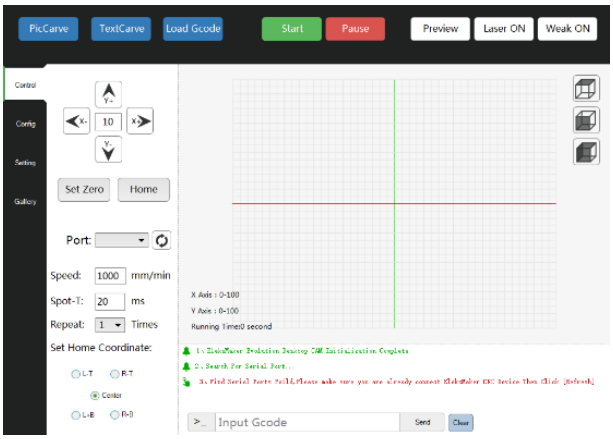

Fig. 1: Eleksmaker.

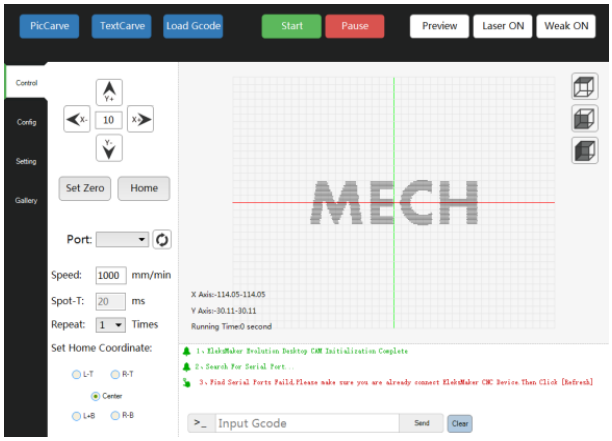

Fig. 2: Eleksmaker Working Area.

Arduino Nano :

The Arduino nano is a small and bread board-friendly board device. It is the main function of the portable laser cutting and engraving machine. It gives the required information from the laser plotter to Arduino.



Fig. 3: Arduino Nano.

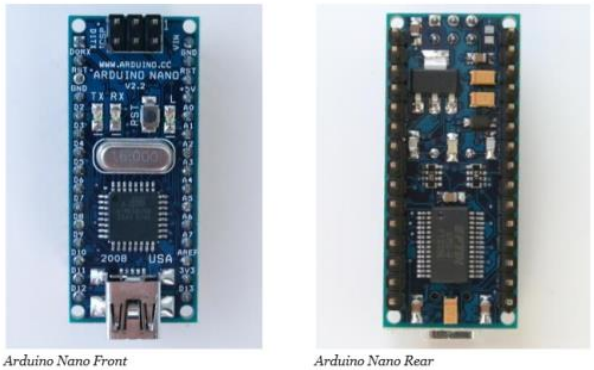

Fig. 4: Arduino Nano Front and Rear view.

Arduino CNC shield:

This CNC Three-Axis Stepper Motor Drive Electronic Control Panel with respect to the Arduino Nano Shield For laser cutting and engraving machine to Supports adjusting Laser Power, Weak light function, Optical coupling isolation, Anti-jamming. Support for stepper motor, The latest CNC firmware, Motor subdivision. Mainly it will used for the giving the required power to the stepper motors in both directions at specific time and also the laser power for the laser

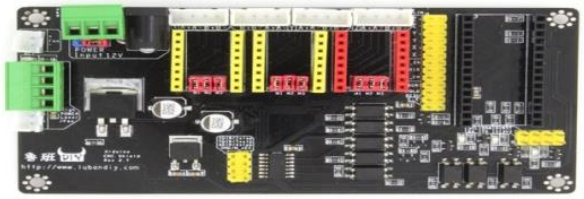

Fig. 5: Arduino Cnc Shield.

Stepper Motor Driver:

The miniature scale venturing driver for controlling bipolar stepper motors which have worked in interpreter for simple activity toward any path. This implies we can control the stepper motor with only 2 pins from our controller, or one for controlling the revolution heading and the other for controlling the means of the engine.



Fig. 6: Stepper Moter Driver.

This Driver gives five distinctive advance resolutions: full-step, haft-step, quarter-step, eight-advance and sixteenth-step. And further more, it has a potentiometer for modifying the present yield, over-temperature warm shutdown, and hybrid current security in view of the application.

Stepper Motor:

Stepper motor is a brushless DC electric motor that divides a full rotation into a number of equal steps. They have numerous curls that are composed in bunches called "stages". By stimulating each stage grouping, the engine will pivot, one stage at a time. With a PC controlled coding called G-Code, you can accomplish exceptionally exact situating and additionally speed control. Hence, stepper motors are the engine of decision for some, exactness movement control applications. Stepper motors come in various sizes and styles and electrical qualities in view of the application.



Fig. 7: Steeper Moter.

- Speed Control – Precise augmentations of development likewise take into account brilliant control of rotational speed for process computerization and apply autonomy.

- Normal Direct Current engines have very little torque at low speeds. A Stepper motors are mostly used at low torque and low speeds, so they are a decent decision for applications requiring low speed with high exactness.

Laser Diode Module:

Laser Diode Modules are utilized as a part of an assortment of uses that require little sizes notwithstanding low power utilization with long working life-time. Laser Diode Modules are perfect for applications, for example, life science, mechanical, or logical instrumentation, notwithstanding laser line age or machine vision. Laser Diode Modules are accessible in a wide assortment of wavelengths, yield powers, or pillar shapes in view of the application. Green lasers give more prominent differentiation on materials, for example, hot metal or wood, notwithstanding seeming brighter to the human eye than red. Laser Diode Modules intended for organized light brightening, brutal situations, or line age are likewise accessible. We are utilizing a 500mw power laser module with 450nm wavelength for this undertaking.



Fig. 8: Laser Module.

Correlation Among the other Brand items and Portable Laser cutting and engraving machine.

Name of the product	Voltage	Power	Control software	Price
SLB Works Brand New Mini Laser Engraving Cutting Machine	DC 12V	500mW	benbox	₹49,347.00
Zeta USB DIY Laser Cutting Engraving Machine	DC 12V	500mW	Support English design software	₹28,682.32
Lighting the box NEJE DK-8 pro-5 Laser Engraver Cutter Machine	DC 12V	500mW	Support English design software	₹27,362.00
Portable Laser cutting and engraving machine	DC 12V	500mW	Eleksmaker or benbox	₹13,360.00

Material selection:

At the point when look at the quality, thickness, Elastic modulus, and every single other factor to the next material evaluations at long last we select the review Aluminium 2014 Alloy for the LASER CUTTING AND ENGRAVING MACHINE.

The chemical composition of Aluminium 2014 alloy.

Element	Content (%)
Aluminium	93.6
Copper,(CU)	4.4
Silicon, (SI)	0.9
Magnesium,(MG)	0.5
Chromium, (Cr)	0.98
Manganese,(MN)	0.6

4. Design

Subsequent to doing certain refinement in the past idea and meeting with configuration controls to choose and think of a more enhanced and better outline for laser cutting and engraving machine. In this, the stage is adjusted for y-pivot development and furthermore the X-hub minute. The stage is a mobile plate associated with a stepper motor controlled by a microcontroller called Arduino CNC Shield Driver. Vertical stands are kept to suit laser with the goal that it is opposite to the bed or stage. The laser is mounted with help of laser lodging and attachment securing and furthermore the fans cooling the hot sink. It outlines done in Solid Works 2015, This plan has a more practical look and soundness. The fig beneath demonstrates the scoundrel display created to it.

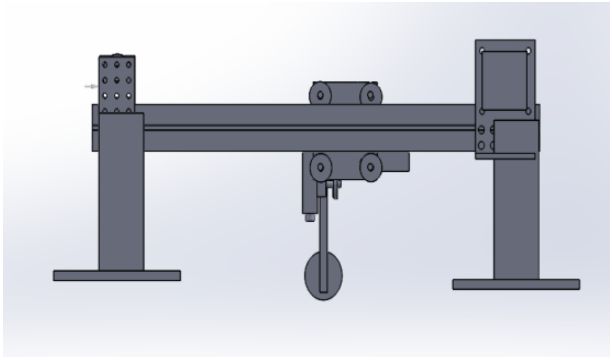

Fig. 9: Back View.

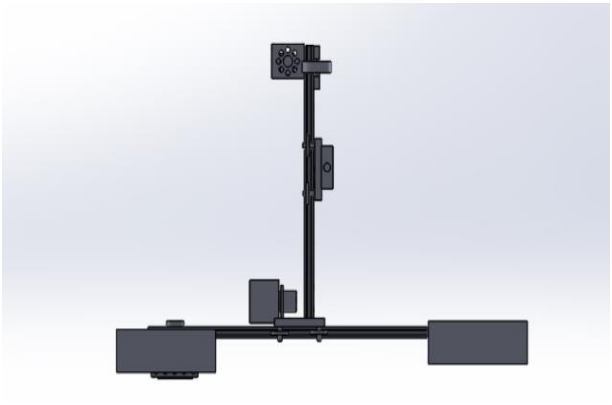

Fig. 10: Bottom View.

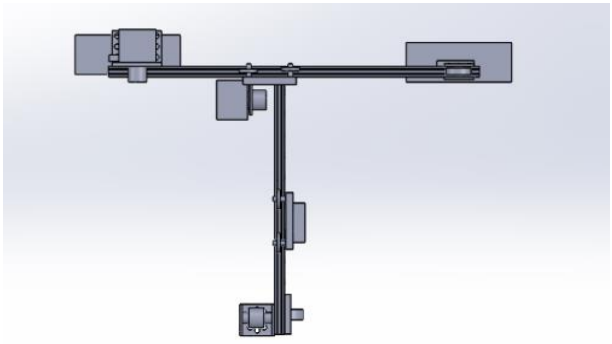

Fig. 11: Top View.

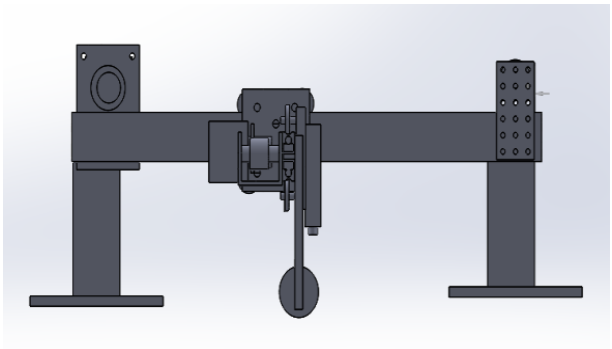

Fig. 12: Front View.

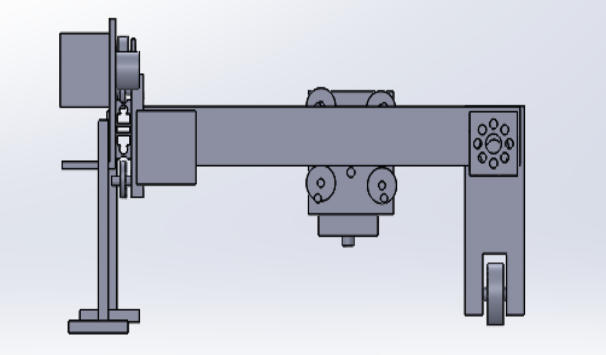

Fig. 13: Left View.

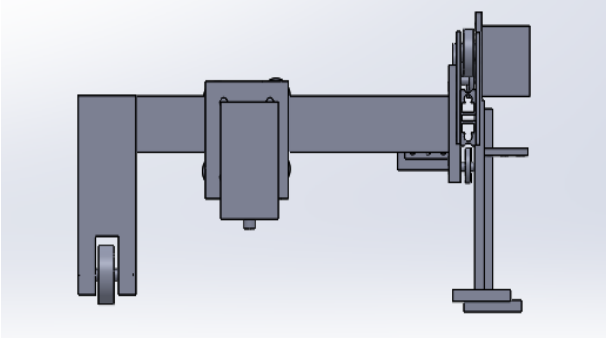

Fig. 14: Right View.

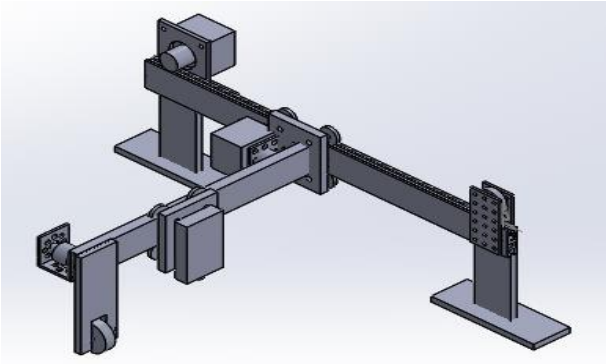

Fig. 15: Isometric View.

5. Conclusion

As per the industrial feasibility optimised the cost of the laser cutting and engraving machine with the capacity of 500mW, 405nm wavelength .Based on Literature review and steps of working procedure simplified the laser cutting and engraving machine. The key point was proficient that was to produce a laboratory modelled Laser cutting and engraving machine. The result seems for the better quality cutting and engraving.

References

[1] Radovanovic M., 2000, Working Quality by Laser cutting and engraving machines, Proc. of the 7th Intern. Conf. on Tribology, Budapest, Hungary, pp. 255-258.

[2] Jamaleswara Kumar, Evaluation of Mechanical Properties of Natuaral fiber of reinforced composit (IJCSER), Vol. 4, Issue 5, pp 77-86.

[3] Vaxevanidis N.M., Petropoulos G., Dašić P., Mourlas A., 2006, Multi-parameter analysis of surface finish in electrodischarge machining of tool steels, Proc. on CD-ROM of 6th Intern. Conf. ″ Research and Development in Mechanical Industry - RaDMI 2006 ″, Budva, Montenegro, pp. 9-16.

[4] Joshua D. Ramos, "Design and Testing of Components for a Low Cost Laser Cutter", Massachusetts Institute of Technology, 1995.

[5] Milton Keynes, RNR Associates, "Diode lasers now pushing the power limits", UK, 2008.

[6] J Dong, C Yuan, J.A Stori, P.M Ferreira, "Development of a high-speed 3-axis machine tool using a novel parallel kinematics X-Y table", Department of Mechanical and Industrial Engineering, University of Illinois, USA, 2012.

[7] Bullinger H-J (2009) Aside from the energetically loaded laser-active medium the crystal, liquid or gas – it is necessary to feed back the generated photons into the medium using a Technology Guide.