International Journal of Basic and Applied Sciences, 14 (SI-2) (2025) 157-168

International Journal of Basic and Applied Sciences

Website: www.sciencepubco.com/index.php/IJBAS
https://doi.org/10.14419/xjekh456
Research paper

Process, Performance, and Role of Friction Stir Welding for Joining Aluminium Alloys: A Comprehensive Review

Avinash B. Aher [1, 3*], Vijay Kumar Pandey [2], Makrand Shirke [3]

[1] *Research Scholar, Department of Mechanical Engineering,Vivekananda Global University, Jaipur, Rajasthan, India*
[2] *Associate Professor, Department of Mechanical Engineering,Vivekananda Global University, Jaipur, Rajasthan, India*
[3] *Assistant Professor, Department of Mechanical Engineering, Amrutvahini College of Engineering Sangamner , Maharashtra, India*
**Corresponding author E-mail:avinash.aher@avcoe.org*

Received: July 5, 2025, Accepted: August 1, 2025, Published: August 12, 2025

Abstract

It is a solid-state welding technique that bonds materials below their melting point, offering important benefits over fusion welding, such as superior mechanical properties and reduced distortion. This paper comprehensively reviews recent FSW research, detailing the core ideas behind the procedure and systematically analyzing critical parameters for welding (speed of rotation, traverse speed, Axial force), work piece materials, tool design and composition, and work piece dimensions. Defect formation in FSW joints and mitigation strategies are examined. The study further evaluates the advantages and disadvantages of FSW, discusses its current industrial applications, and explores prospects. By consolidating foundational and emerging research, this work provides a holistic overview of FSW as a transformative joining technology.

Keywords: *Friction Stir Welding; Solid-State Coupling; Welding Parameters; Tool Design; Weld Defects; Mechanical Properties*

1. Introduction

The Industrial Revolution constituted a pivotal era in human technological advancement, catalyzing the development of novel materials. These engineered materials became fundamental enablers of technological progress across terrestrial, aeronautical, maritime, and aerospace domains, driven by their inherent cost-effectiveness and structural longevity. Furthermore, the 20th century marked significant advancements in engineering practices and the deliberate evolution of materials science.[1] Welding constitutes a metallurgical joining process wherein two metallic components are coalesced to form a continuous, monolithic structure. This fundamental fabrication method, essential for achieving structural integrity in assemblies, is typically facilitated through the application of thermal energy and/or compressive force to induce localized atomic diffusion and bonding. [2]Aluminium's combination of low density, corrosion resistance, formability, and aesthetic appeal has established it as an economically favourable material for diverse applications[3]. While pure aluminium exhibits relatively low strength, its mechanical properties are enhanced through alloying. Alloys that cannot be heated (e.g. Series 1xx, 3xx, 4xx, and 5xx,) are produced by adding elements such as Iron, manganese, silicon, and magnesium. High-strength, The alloys that can be heated (e.g., series 2xxx, 6xxx and 7xxx) are created through alloying with silicon, magnesium, copper, and zinc.[4]. These alloys are selected for demanding applications including satellite components, engines, fuel cells, missile bodies, and airframes according to their specific mechanical and physical characteristics. Arc welding, a prevalent industrial process, joins metals by melting and fusing them. However, conventional arc welding techniques face significant challenges when joining aluminium alloys. Key factors complicating the process include, rapid oxide formation: (molten aluminium readily forms a refractory oxide layer (Al_2O_3) that inhibits fusion), hydrogen solubility (high hydrogen solubility in molten aluminium and its sharp decrease upon solidification lead to porosity), thermal characteristics (high thermal conductivity, significant thermal expansion, and pronounced solidification shrinkage promote distortion and solidification cracking.[5]

Aluminium alloys are critically important in aerospace, marine, and automotive industries due to their essential combination of high strength-to-weight ratio and superior corrosion resistance in demanding industrial and marine environments enabling them to replace steel components.[6] However, joining aluminium and its alloys via conventional fusion welding processes presents significant challenges. The selection of a welding process, either fusion welding or solid-state welding is fundamentally determined by the chemical composition of the base material. In fusion welding, heat is applied to melt the base metals within the joint region. To enhance joint strength and often to modify composition, filler metal is typically introduced into this molten weld pool. The requisite heat generation is achieved using energy sources such as an electric arc, electric current (resistive heating), or combustion of gas mixtures. When melting is specifically accomplished via an electric arc, the process is designated as arc welding. Resistance welding, a distinct fusion-based method, utilizes heat generated by electrical resistance at the contact surfaces of parts held under pressure. This localized melting, combined with the applied

Copyright © Authors. This is an open access article distributed under the Creative Commons Attribution License, which permits unrestricted use, distribution, and reproduction in any medium, provided the original work is properly cited.

pressure, facilitates coalescence and bonding at the interface. [2] The high reactivity of molten aluminium leads to rapid formation of stable oxides and potential nitrides upon exposure to the atmosphere, resulting in detrimental weld defects. The development of the solid-state joining technique known as Friction Stir Welding (FSW), provides an effective solution to these inherent limitations of fusion welding.

Table 1: Aluminium alloys to be welded: Fusion Welding vs. Friction Stir Welding [8-11]

Alloy Series	Fusion Welding	FSW	Key Reasons
1xxx (Pure Al)	Excellent	Excellent	Low crack sensitivity; no melting defects in FSW
2xxx (Al-Cu)	Poor	Excellent	FSW avoids liquation cracking & HAZ weakness
3xxx (Al-Mn)	Good	Excellent	Both suitable; FSW enhances fatigue strength
5xxx (Al-Mg)	Good (if Mg<3%) Poor (if Mg>3%)	Excellent	FSW prevents β-phase sensitization in high-Mg alloys
6xxx (Al-Mg-Si)	Moderate (Requires filler/preheat)	Excellent	FSW eliminates solidification cracking & HAZ softening
7xxx (Al-Zn-Mg)	Poor (except 7005/7039)	Excellent	FSW overcomes stress corrosion & porosity

The FSW, or friction stir welding process employs A spinning non-consumable tool that sequentially dives into the work piece interface and traverses along the joint line. This action generates frictional heat at the adjoining surfaces, facilitating their solid-state coupling. created in 1991 by Thomas et al. [11].

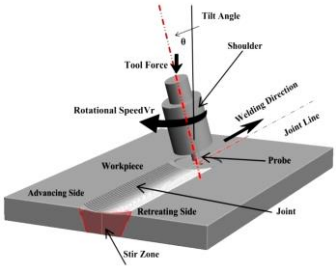

Fig. 1: Schematic Diagram of the Friction Stir Welding (FSW) Process[12]

As illustrated in Figure 1, the primary heat source in FSW is friction produced when the rotating instrument comes into contact with the work piece surface. This heat input plasticizes the material surrounding the weld line. The forward progression (traverse) of the tool dynamically intermixes and consolidates the softened material, forming a solid-state joint.[13] The resulting weld microstructure in Friction Stir Welding (FSW) is critically influenced by several process parameters. These include tool rotational speed, traverse speed, tool geometry (pin and shoulder profiles, as shown in Figure 1, tool tilt angle, axial force applied to the work piece, and the effectiveness of work piece clamping.

Friction Stir Welding (FSW) is characterized by intense frictional and deformational heating, where a substantial amount of thermal energy is generated at the interface between the rotating tool and the work piece. This heat is subsequently conducted away from the tool material into the surrounding weld region, critically influencing both weld integrity and microstructural development [14]. The thermal profile of the welded joint is not uniform; rather, it produces distinct metallurgical zones, each defined by unique grain characteristics resulting from varying degrees of thermomechanical processing. These zones are classified as follows [15]:

1. Nugget Zone (NZ) / Stir Zone (SZ): The central region where severe plastic deformation and frictional heating result in dynamic recrystallization, producing a fine, equiaxed grain structure.
2. Thermomechanical Affected Zone (TMAZ): Adjacent to the nugget, this zone undergoes both thermal and mechanical effects, leading to deformed and partially recrystallized grains.
3. Heat-Affected Zone (HAZ): Located farther from the weld centre, this area experiences thermal cycling without mechanical deformation, causing grain coarsening or phase transformations depending on material composition.
4. Base Material (BM) Zone: The unaffected parent material retaining its original microstructure.

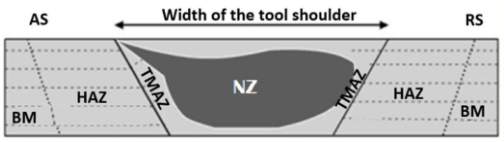

Fig. 2: Different zones in FSW[16]

As depicted in Fig. 2, the Heat-Affected Zone (HAZ) forms the outermost part of the world-affected region. Unlike the NZ and TMAZ, the HAZ is not subjected to mechanical deformation; however, the thermal exposure alters its microstructure, potentially affecting hardness and corrosion resistance. The extent of these changes depends on peak temperatures, cooling rates, and material properties. In Friction Stir Welding (FSW), the Thermomechanical Affected Zone (TMAZ) undergoes significant plastic deformation due to the mechanical stirring action of the tool, coupled with thermally induced microstructural transformations. Adjacent to the TMAZ, the nugget zone (also referred to as the stir zone) constitutes the central portion of the weld, where both heat input and mechanical deformation reach their peak intensity. This region typically exhibits an onion-ring pattern, with its dimensions closely corresponding to the geometry of the tool pin. The nugget zone is characterized by dynamic recrystallization, leading to the formation of fine, equiaxed grains as a result of severe plastic strain and frictional heating. However, the combined thermomechanical effects in these regions can also introduce microstructural defects, such as voids or irregular grain growth, which may compromise the mechanical integrity and overall quality of the welded joint.

FSW enables the production of high-strength, defect-free welds in aluminium alloys [17].The influence of deformation conditions in solid-state aluminium welding processes on the resulting weld strength.[18] The katana swords of ancient Japanese Samurai exemplify early solid-state welding, employing forge welding techniques to bond steel layers.[19] In solid-state welding processes, coalescence is achieved through applied pressure and/or thermal energy. Crucially, the heat input remains below the melting point of the base materials, inducing

plasticization rather than liquefaction. This thermomechanical processing softens the material at the interface, facilitating atomic diffusion and metallurgical bonding without a molten phase [20]. Solid-state welding processes utilize applied pressure and/or controlled thermal energy to achieve coalescence. Critically, the thermal input remains subsolidus (below the melting point of the base materials), inducing plasticization at the interface rather than bulk melting. This thermomechanical softening facilitates atomic diffusion and metallurgical bonding while maintaining the solid phase.[20] The Friction Stir Welding (FSW) process demonstrates applicability to both similar and dissimilar material combinations, including joints between metals with disparate melting temperatures and non-ferrous material systems, without requiring bulk melting.[21]

1.1 Friction stir welding applications

1.1.1 Aerospace industry

The aerospace sector widely adopts Friction Stir Welding (FSW) for manufacturing components such as airframe structures, fuel reservoirs, slender metallic coverings, aerodynamic surfaces, and for repairing defective welds. Significant cost savings have been demonstrated using this process. For instance, FSW drastically reduced the for comprehensive manufacturing expenditure the US Army's "Slipper" freight interface pallet, bringing it down to 19% from an original 61%. Similarly, Boeing reported substantial benefits when applying FSW to the Launchers for the "Delta IV" and "Delta II" spacecraft , achieving approximately 60% cost reduction and slashing production duration on 23 days down to just 6 days[22].
SpaceX also utilizes FSW, specifically for joining the fuel tanks on its Falcon "1" and Falcon "9" rockets. Notably, the Falcon "9" tanks, comprising it's The walls and domes are recognized as the world's largest FSW structures made from aluminium-lithium alloy. Eclipse Aviation Corporation further showcases FSW's advantages by replacing traditional bonding and riveting methods with it in the production of their Eclipse 500 commercial aircraft. This shift resulted in: 1) Faster joining speeds 2) Enhanced life of tiredness 3) Strengthening of the joints 4) Reduced Time and expense of assembling. Crucially, implementing The FSW was abolished the need for 7,000 rivets and other fasteners [23]. Figure 3 [24] illustrates sections of the Eclipse 500 private plane fuselage manufactured using Friction Stir Welding (FSW). Traditional outer panel designs for aircraft fuselages involve riveting beams directly onto the panel surface, a method which introduces sealing challenges. By applying FSW technology to these outer airframe panels, manufacturers achieve significantly faster production speeds. Furthermore, FSW optimizes critical structural performance characteristics, including stress distribution, fatigue life, and corrosion resistance.[25]

Fig. 3: Internal Structural Framework of an Aircraft Fuselage[24]

1.1.2 Shipbuilding and Marine Industries

It is extensively used in shipbuilding for fabricating large-scale aluminium structures. Key applications include: 1) Production of extruded aluminium panels 2) Construction of High-speed ferry decks, hulls, and interior construction for LPG storage ships 3) Fabrication of Helicopter landing platforms, bulkheads, floors, and main ship body parts. Norwegian shipbuilder reported increased production throughput and turnover utilizing FSW panels that are premade. Norway's Marine Aluminium has employed FSW since 1996, welding panels with multi-kilometre total weld spans, notably for The World, a cruise ship [30]. Mitsui Engineering and Shipbuilding (Japan) implemented FSW extensively on the Super Liner Ogasawara is a freight and passenger ship vessel achieving 42.8 knots with 740-passenger capacity [26]. FSW panels are globally adopted designed for hovercraft, cruise ships, and high-speed ferries. Japanese industries specifically utilize the process for manufacturing corrosion-resistant seawater panels and honeycomb structures [22].

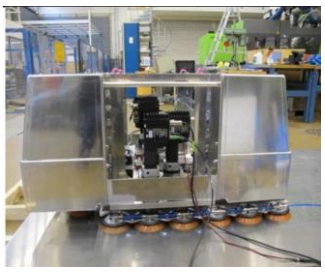

Fig.4: Automated Friction Stir Welding (FSW) Machine for Industrial Applications

Portable friction stirs welding (PFSW) equipment intended for maritime use is shown in Figure 4. Floating Bobbin Friction Stir Welding (FBFSW), a method designed primarily for shipbuilding, can be combined with portable FSW devices [36]. Critical field operations, such as ship repair and on-site component manufacture, are made possible by these PFSW devices.

1.1.3 Automotive Industry

Friction Stir Welding (FSW) adoption is increasing globally for fabricating key automotive components. Applications include: sheet metal bodywork, engine support frames, heavy-duty vehicle bodies, alloy fuel tankers, customized blanks, wheel rims, aluminium structural parts etc. In 1998, TWI-led consortium (EWI, Chrysler, Tower Automotive, General Motors, Volvo, Ford, BMW, and Rover) investigated FSW for aluminium tailored blank door panels [27].

Implementation examples include:

- Ford (USA): Employs FSW on “Ford GT" is a sports vehicle centre tunnel, reporting a 30% increase in both dimensional accuracy and joint strength.
- Honda: Utilizes mass production of aluminium-to-steel dissimilar material joints in door panels and suspension systems[27].
- Tower Automotive: Produced FSW aluminium Lincoln Town vehicle suspension linkages, achieving 40% less weight and increased mechanical strength[23].
- Audi: Sources FSW tailored blanks from Riftec GmbH (Germany) for the "Audi R8" centre closing panel. This resulted in >20% material savings and improved efficiency through reduced vehicle weight and forming costs [22].

Automotive manufacturers and suppliers employ Friction Stir Welding (FSW) and Friction Stir Spot Welding (FSSW) technologies. These processes enable the production of lightweight structures in vehicle components, essential for improving fuel economy and ensuring compliance with emissions regulations[28] Figure 5. Representative automotive structural assemblies fabricated via Friction Stir Welding (FSW) [29].

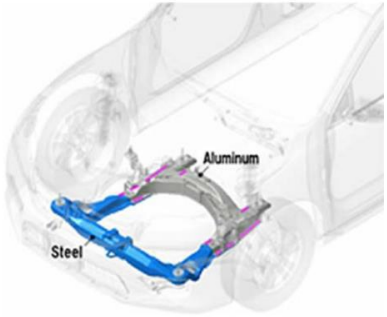

Fig.5: Aluminium-Steel Hybrid Sub frame Assembly in Automotive Chassis Friction Stir Spot Welding (FSSW) [28].

1.1.4 FSW Applications Beyond Aerospace & Automotive:

Friction Stir Welding (FSW) is expanding into diverse sectors, including construction, electrical engineering, piping systems, and thermal management.

- Thermal Management: FSW is extensively employed in heat sink fabrication.
- Electrical Industry: Increasing adoption for joining critical components:
  - Electrical motor housing
  - Electrical connectors
  - Bus bars
- Construction & Industrial Fabrication: Utilizes portable FSW equipment for producing:
  - Architectural facade panels (Al, Cu, Ti)
  - Window frames
  - Aluminium piping networks
  - Aluminium bridge structures
  - Reactors (power generation, chemical processing)
- Future Potential: FSW exhibits broad applicability potential across nearly all industrial sectors. Emerging uses include fabrication of:
  - Refrigeration panels
  - Pressurized gas storage (tanks, cylinders)
  - Commercial cooking equipment & kitchen components [30].

1.2 Friction stir welding's benefits and drawbacks

- **Benefits of friction stir welding:**

1. Solid-Phase Joining: FSW is fundamentally a solid-state welding technique, avoiding bulk material melting [31].
2. Dissimilar Material Compatibility: The process enables effective joining of metallurgically incompatible materials[32].
3. Reduced Environmental Impact: FSW eliminates the need for shielding gases, filler metals, and produces no harmful fumes or spatter, offering significant environmental benefits [33].
4. Process Flexibility: FSW exhibits versatility, suitable for implementation as a portable operation or integrated into fixed-position robotic systems [34].
5. High Automation Potential: The process is amenable to full automation for consistent, high-volume production [35].
6. Defect Mitigation: Performing welds below material melting temperatures inherently suppresses fusion-related defects like porosity, wormholes, and hot cracking [36].
7. Enhanced Material Consolidation: FSW promotes thorough plastic deformation and dynamic recrystallization, resulting in excellent material intermixing and continuous metallurgical bonding at interfaces [37].
8. Non-Consumable Tooling: Joining is achieved using a wear-resistant, rotating tool that does not become part of the weld [38].
9. Gasless and Filler-Free Operation: FSW requires neither external shielding gas nor consumable filler wire [33].
10. Lightweight Alloy Joining Capability: The process is particularly well-suited for welding challenging lightweight materials, including titanium alloys, magnesium alloys, and various composite structures [39]

- **Drawbacks of friction stir welding:**

1. Robotic System Requirement for Complex Geometries: Joining components with complex contours necessitates expensive, multi-axis robotic systems to maintain proper tool orientation and traverse [35]

2. Elevated Capital Investment: The initial capital expenditure for FSW equipment (robotics, precision machinery) is typically higher compared to conventional fusion welding techniques [40].
3. Rigorous Fixturing Necessity: The process imposes significant reaction forces, mandating robust and often complex clamping fixtures to secure work pieces and prevent distortion or misalignment during welding[41].
4. Tool Wear Due to Solid-State Processing: As a solid-state process involving severe plastic deformation, the rotating tool shoulder and probe experience substantial abrasive wear when traversing the joint line, particularly with harder materials[42].

Singh et al.[43] investigated microstructural evolution and mechanical properties of magnesium alloys that have been friction-stir-welded in both as-welded (AW) and post-weld heat-treated (PWHT) states. PWHT significantly enhanced tensile properties at the stir zone (SZ), with ultimate tensile strength (UTS) increasing by 8.8%, elongation-to-failure by 32.4%, and joint efficiency by 3.8%. Conversely, micro hardness at the SZ decreased by 12.95% post-PWHT. Optimal thermomechanical processing parameters for dissimilar Mg alloy FSW were identified as a tool rotational speed of 1400 rpm and traverse feed rate of 25 mm/min. Park and Kim[44] examined the influence of tool rotational speed and traverse speed on material flow dynamics and frictional heating during Friction Stir Welding of dissimilar aluminium alloys AA5052-O and AA6061-T6. Through systematic parameter variation, they evaluated tensile properties within the weld nugget region. Their analysis determined optimal thermomechanical processing parameters at 1600 rpm rotational speed and 61 mm/min traverse speed. Metallographic observations revealed an inverse relationship between traverse speed and process efficacy: reduced traverse speeds enhanced material coalescence while diminishing volumetric defect density in the stir zone. Park et al.[45] analysed the influence of base material orientation on joint characteristics in dissimilar FSW of AA5052-H32 and AA6061-T6. Their research demonstrated that material flow patterns and intermetallic mixing efficacy within the stir zone exhibit significant dependence on work piece positioning relative to the advancing side (AS) and retreating side (RS). For this alloy combination, enhanced microstructural homogenization occurred when AA5052-H32 occupied the AS with AA6061-T6 on the RS. This configuration proved metallurgically superior to the inverse arrangement (AA6061-T6 on AS / AA5052-H32 on RS). Crucially, micro hardness mapping revealed AA5052-H32 consistently exhibited the minimum hardness values within the heat-affected zone (HAZ) regardless of orientation. This localized softening directly correlates with tensile fracture initiation exclusively within the AA5052-H32 region during mechanical testing.

Cakan et al. [46] employed Friction Stir Welding to join dissimilar materials – commercially pure copper and AA7075-T6 aluminium alloy plates. The parameter optimization study yielded a peak ultimate tensile strength (UTS) of 224 MPa using the following thermomechanical processing conditions: 660 rpm rotational speed, 32 mm/min traverse speed, and constant tool geometry. Wang et al. [47] investigated Friction Stir Welding (FSW) and post-weld heat treatment (PWHT) of AA7050 aluminium alloy. Application of the T74 temper after welding resulted in a tensile strength increase exceeding 12% in the weld region compared to the as-welded condition. Su et al.[48] conducted double-sided friction stir welding (DS-FSW) on AA6063-T6 aluminium alloy (10 mm thickness), with single-sided FSW (SS-FSW) as the comparative baseline. Fatigue testing yielded 92 MPa fatigue strength for DS-FSW specimens versus 76 MPa for SS-FSW specimens. Hunt et al. [49] created a universal in-process technique for detecting friction stir welding (FSW) defects. According to their analysis, industrial FSW applications need high traverse rates (>1500 mm/min) in order to be economically viable, yet preserving defect-free weld integrity at these speeds is extremely difficult. When used to aluminium blanks welded at 1500-3000 mm/min, their technology successfully identified process-induced faults while also lowering non-destructive evaluation (NDE) expenses in manufacturing environments. Singh et al. [50]evaluated the impact of post-weld heat treatment (PWHT) on microstructural evolution and mechanical performance of friction stir welded AZ31B magnesium alloy joints. The as-welded condition exhibited a tensile strength of 145.4 MPa (±4.9 MPa) and elongation of 9.5% (±0.9%). PWHT implementation resulted in quantitative enhancements of 4.74% in ultimate tensile strength and 15.78% in elongation compared to the non-treated baseline.

This study investigates the fundamental process mechanics, key advantages, inherent limitations, and primary industrial application areas of Friction Stir Welding (FSW). The analysis encompasses the operational principles underlying FSW implementation, its comparative benefits over conventional welding techniques, the technical constraints affecting its deployment, and the established sectors where its utilization offers significant engineering value.

Table 2: Summary of FSW Tool Pin Types, Material Properties, and Mechanical Results.

Material Combination	Thickness	Tool Pin Design	Base Material Strength (MPa)	Ultimate Tensile Strength (MPa)	Maximum Elongation (%)	Study Reference
AA2024 joined with AA7075	3 mm per sheet	Pyramidal, tapered conical, and straight pin tools were tested	405.7	Ranged from 305.27 to 388.21	Between 2.84% and 7.4%	Beygi et al. [57]
AA2519-T62	5 mm	Threaded pin configuration	469	405.6	8.3%	Kosturek et al. [58]
AA8011	4 mm	Utilized a straight cylindrical tool	Not specified	140	18%	Sundar et al. [59]
AA6061-T6	5 mm	Tools with tapered profiles and varying angles were used	330	Ranged from 168 to 276	10% to 14%	Hassanifard et al. [60]
AZ80A Magnesium Alloy	6 mm	Cylindrical pin tool used	290	234.8	Not reported	Gunasekaran et al. [61]
AA8090	6 mm	Square-trapezoidal, hexagonal, and threaded pin geometries	440	191	5.98%	Di Lorenzo [62]
AA7075-T651	10 mm	Tool design not mentioned	470	412	9%	Parasuraman et al. [63]
AA2195 with AA2219	5 mm	Threaded profile tool employed	570	350	Not available	Agilan et al. [64]
Clad sheet of AA3003/AA6013	0.15 to 1.5 mm	Threaded pin tool used	152.9	187	25.6%	Gao et al. [65]
AA6063-T6	6 mm	Straight cylindrical pin used	Not mentioned	286.15	Not reported	Rajkumar et al. [66]

2. FSW Process Parameters

The performance and structural integrity of Friction Stir Welding (FSW) joints are fundamentally governed by the complex interactions of key processing parameters during fabrication. These parameters directly control the essential mechanisms of heat generation and material flow, which ultimately determine the weld's microstructure, mechanical properties—including tensile strength, hardness, ductility, and fatigue life as well as the likelihood of defects such as voids, lack of penetration, kissing bonds, and flash. Consequently, understanding the relationships between controllable process variables and resulting weld characteristics is crucial for developing reliable and optimized FSW procedures across different materials and applications. Extensive research efforts have therefore focused on the primary influential parameters: tool rotational speed (RPM), dictating frictional heat input; traverse speed (welding speed), controlling thermal exposure and cooling rates; tool geometry, encompassing probe shape (e.g., cylindrical, square, conical., threaded), shoulder design (e.g., flat, concave, scrolled), and dimensions, which critically steer material flow and consolidation; and axial (downward) force, impacting contact conditions and forging pressure essential for sound bonding. Given the critical importance of these factors and the substantial body of research dedicated to understanding their effects, the subsequent Literature Review systematically synthesizes key findings from diverse studies. This synthesis aims to establish the current understanding of the quantitative and qualitative links between these FSW process variables and the resultant weld quality and performance metrics.

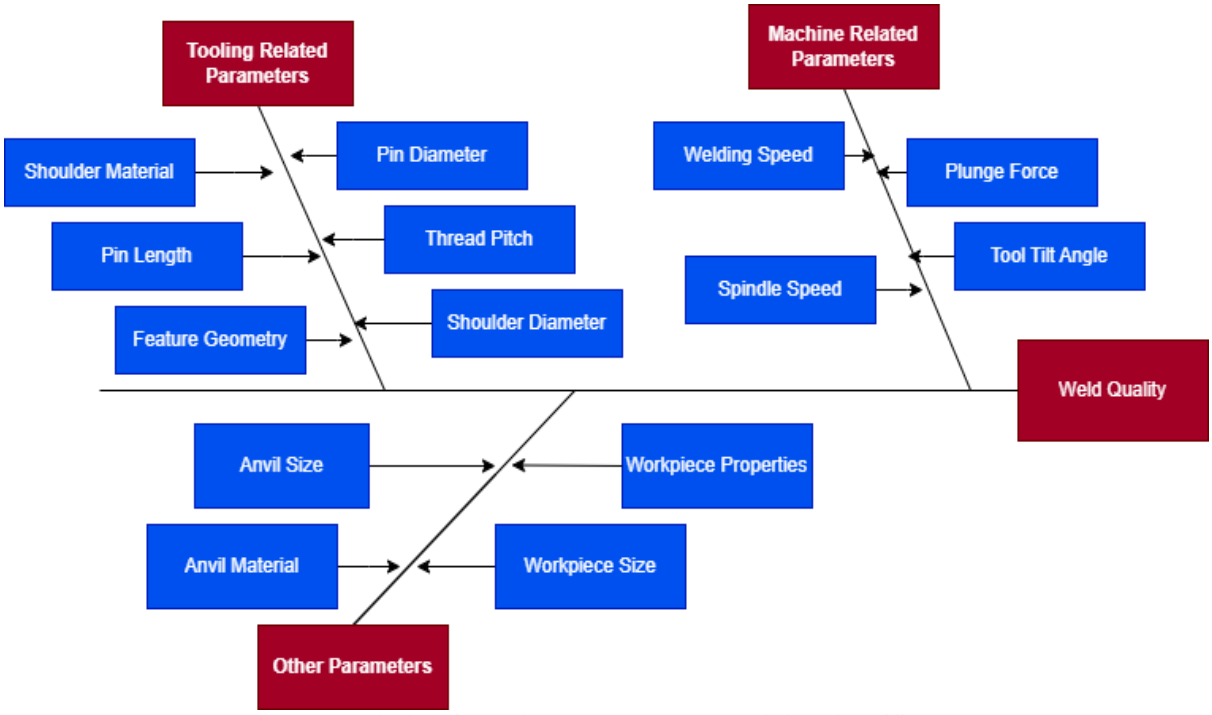

Fig.5: Categorization of governing process parameters in Friction Stir Welding[51]

Key parameters influencing FSW outcomes are systematically grouped into three classes, as depicted in Figure 5:

3. Tool geometry

The geometry of the FSW tool represents a primary optimization variable, playing a fundamental role in controlling material flow dynamics and determining permissible traverse rates. Tool geometry constitutes a critical design consideration in Friction Stir Welding (FSW), directly influencing joint integrity. geometrically optimized tools perform multiple thermo-mechanical functions: generating frictional heat, plasticizing and stirring material, disrupting oxide layers along the joint line, applying forging pressure, and facilitating material transport within the weld zone. Concurrently, the tool must possess sufficient structural integrity to withstand process-induced forces and torques while maintaining dimensional compatibility with the specified plunge depth.[52] Numerous specialists have conducted various. Finding the best process parameters for Friction Stir Welding (FSW) has been the subject of numerous optimization studies. Among these elements, the shape and design of the tool pin are crucial in determining the weld's quality and efficiency. Material flow, heat production, and the joint's overall mechanical characteristics are all directly impacted by the tool pin profile. As illustrated in Figure 6, a wide range of tool geometries are routinely utilized in FSW applications. Depending on the material and application, each of these advanced designs which include straight cylindrical, conical, threaded, hexagonal, triangular, square, whorl, MX triflute, flared triflute, skew, and others offers distinct benefits. Early tools FSW utilized undifferentiated shoulders and simplistic cylindrical/threaded pin geometries. Pioneering design innovations were subsequently established by Thomas et al.[38] marking a foundational shift toward specialized tool configurations. Illustrated in Figure 6, the Flared-Triflute™ and Skew-Stir™ tool geometries represent early innovations targeting two critical outcomes: (i) intensified disruption of interfacial oxides and (ii) increased ITAB width, notably in thrust weld applications[27-28].

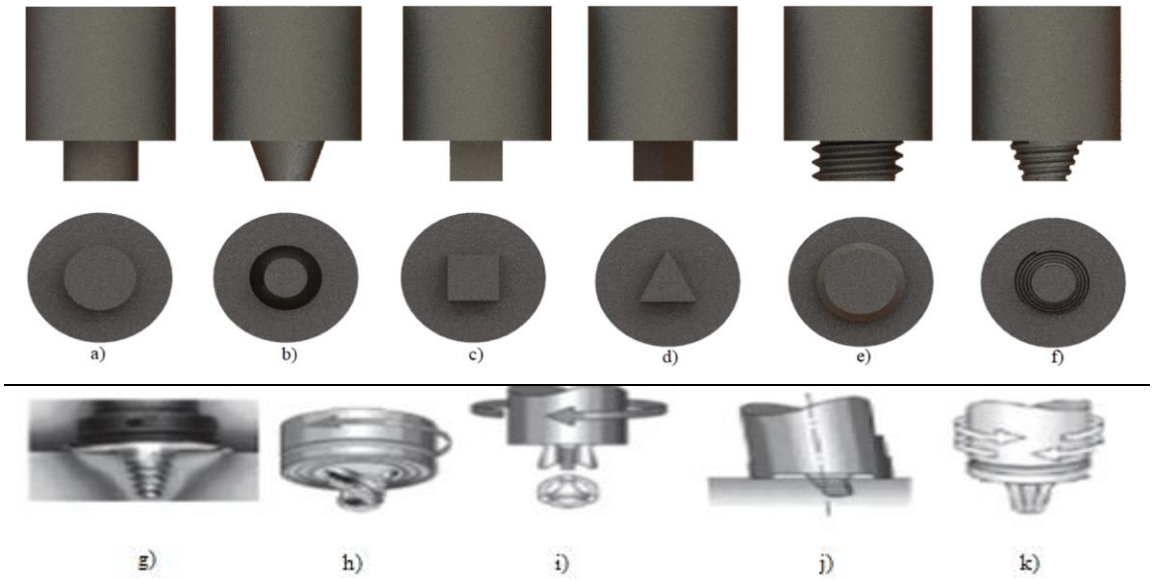

Fig.6: (A) Straight Cylindrical Pin, (B) Tapered Conical Profile, (C) Square-Shaped Pin, (D) Triangular Profile Tool, (E) Threaded (Helical) Pin Design, (F) Tapered Threaded (Conical Helix) Pin, (G) Spiral or Swirling Pin Structure, (H) Multi-Fluted (MX-Type) Triflute Tool, (I) Expanded-End Triflute Pin, (J) Angled or Skewed Pin Configuration, (K) Post-Stir (Re-Stirring) Tool Design [53]

The Welding Institute (TWI) developed the Trivex™ tool (Fig. 7), which reduces process forces while offering enhanced manufacturability Research on FSW tool optimization particularly for aluminium alloy joining remains an active focus in ongoing studies [52].

Fig. 7: Trivex tool, designed by TWI[27]

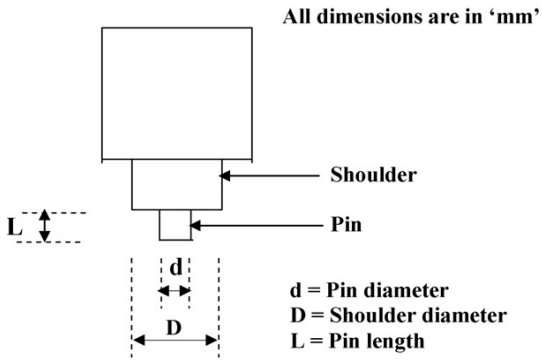

Fig. 8: FSW Geometries[54]

The shoulder's diameter, a critical geometric parameter required in the design of the FSW tool, is found by a trial-and-error method. Because peak temperatures, process torque, and shoulder diameter have complex effects on thermal cycles, the characterization approach might be used to optimize the FSW process. The tool pin profile for nonferrous metals is prepared using either high-strength steel or heat-treated mild steel. Tool material developments in this field enable advances in design and material choices for specific applications.[12] Each of these elements could have a significant impact on the quality of the weld joint. Each of these elements has the potential to significantly affect the weld joint's quality. [29] The rate at which a tool travels along a joint line is known as transverse speed; welding speed is desirable. The tool speed and welding speed decide whether the weld receives enough heat to positively influence its qualities. Hassanifard et al. [55] characterized the Mechanical Properties of AA6061-T6 Friction Stir Welds using diverse tool geometries. Their results demonstrated enhanced tensile performance in joint specimens with increasing tool cone angles from 0° to 20°. Liu et al. [56] analysed the influence of tool shoulder and pin dimensions on AA6061-T651 butt weld microstructure and mechanical properties. Their study identified:(i) Crack initiation within low-hardness regions of the weld zone, (ii) A positive correlation between traverse speed and tensile strength enhancement (iii) Negligible impact of tool geometry variations on weld integrity metrics. Research on friction stir welding tool geometry effects demonstrates distinct investigative foci across material systems. Zhao et al. [57] characterized material flow dynamics in AA2014 butt joints under varying pin geometries. Concurrently, Elangovan and Balasubramanian [58] evaluated five pin profiles (straight cylindrical, conical

cylindrical, toothed cylindrical, square, triangular) for AA2219 welds, quantifying impacts on microstructure, tensile strength, and micro hardness. Scialpi et al. [59] assessed shoulder geometry influences on these same mechanical/metallurgical properties in AA6082 butt welds. Notably, shoulder designs typically incorporate concave features and profiled peripheries to modulate material confinement. In their study of friction stir welded (FSW) plates, Muthu and Jayabalan [60] examined helical, flat conical, and another flat conical screw pin profile. Their research, utilizing AA1100 series aluminium and pure copper, indicated that the flat conical pin profile yielded superior mechanical properties. The convex hollow shoulder assembly designed by Sorensen and Nielsen [61], which uses spiral pins, offers the advantages of reduced process forces and the capability to work without any tool tilt (zero degrees). The FSW process is governed by four primary parameters: rotational speed, traverse speed, plunge force, and tilt angle. During operation, the rotating tool mixes the work piece material, moving it forward from the front (advanced side) to the back (retreating side) of the pin. Effective joint formation is critically dependent on setting the correct rotational speed, advancing the tool at an appropriate rate along the weld seam, and ensuring adequate shoulder contact to produce the required heat through friction. When tool rotation speed is too high, it causes excessive heat generation within the weld area. This causes turbulent flow within the weld seam, which creates micro-voids in the mixing zone that degrade strength. Insufficient rotation speed, however, produces inadequate heat for effective bonding, yielding weak joints with low strength[39-41]. For FSW of AA7075 aluminium plates, Suresha et al. [65] identified rotation speed as the most critical parameter affecting weld mechanical properties

4. Joint design

But lap configurations represent conventional joint geometries in friction stir welding (FSW). To prevent separation of adjoining surfaces in identically thick work pieces, rigid clamping to a backing plate is essential. This constraint is particularly critical during the initial tool plunge phase, where significant axial forces are exerted. For lap joints, work pieces are fixtured in an overlapping configuration; welding is achieved by plunging the rotating FSW tool orthogonally through the upper plate into the lower plate and traversing along the weld line. Beyond these common butt and lap geometries, diverse joint configurations are feasible, as illustrated in Fig. 9 [8]. Sorger et al. [66] fabricated an innovative overlap joint featuring a wave-shaped interface on steel via direct friction stir welding (FSW) using the tool probe tip. This configuration achieved significantly enhanced mechanical properties in tensile shear testing, attaining approximately 50% of UTS of the base material using a two-pass welding process. The improvement was attributed to superior material mixing efficiency and a more uniform joint cross-section. In contrast, 1-pass welds of the innovative joint exhibited higher peeling resistance than conventional overlap joints. The study concluded that the wave-shaped interface enables superior mechanical performance at reduced weld pitch ratios.

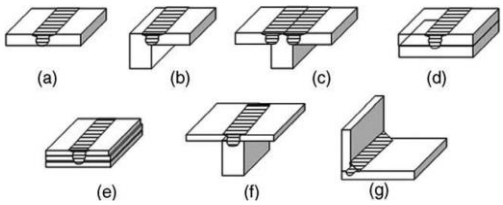

Fig. 9: Various FSW joint configurations[8]

5. Welding parameters

Rotational speed (N, rpm) and traverse speed (v', mm/min) constitute the primary process parameters in friction stir welding (FSW). Material undergoes plastic deformation, stirring, and mixing around the rotating probe. Concurrent translation of the tool displaces material from the advancing front to the trailing rear, completing joint formation. Elevated rotational speeds generate excessive frictional heat, increasing peak temperatures and intensifying material flow. An optimal tool tilt angle (α) ensures effective material containment and transport during traversal. Additionally, precise insertion depth – governed by probe length – is critical for achieving sound weld integrity[8] Wei et al. [67]reported a non-monotonic relationship between traverse speed ('v') and failure load during friction stir lap welding of Al-Ti alloys. Failure load increased with 'v', peaked at 300 mm/min, and decreased at higher traverse speeds. Separately, Hui-jie et al.[68] employed underwater FSW with active thermal management to enhance joint quality through controlled cooling. Krishnan et al. [69] reported a non-monotonic relationship between rotational speed (ω) and axial force versus mechanical characteristics of friction stir welding. Tensile strength and hardness increased with these parameters until reaching an optimum, beyond which property degradation occurred. The researchers employed response surface methodology (RSM) and artificial neural networks (ANN) to model optimal welding parameters for AA6063 and A319 aluminium alloys. Conversely, increased traverse speed (v) was found to adversely affect mechanical responses. Shultz et al. [70] investigated the effects of tool tilt angle (α) and fixturing configuration on weld quality in friction stir welded 5083-H111 aluminium alloy. Ahmed et al. [71] observed significant microstructural refinement when friction stir welding AA7075-T6 and AA5083-H111 rolled plates, with mean grain size decreasing proportionally to increasing traverse speed.

Table 3: Standard Operating Ranges for FSW Parameters

FSW Parameter	Operational Range
Tool Shoulder Size	Between 10 mm and 25 mm
Probe Diameter	Root: 4–7.5 mm, Tip: 3–4 mm
Probe Length	Varies from 2.5 mm to 7.5 mm
Tool Tilt Angle	Adjustable between 0° and 12°
Spindle Rotation Rate (N)	300 to 5400 revolutions per minute
Travel Speed (v)	20 to 475 millimetres per minute
Downward Force Applied	Ranges 220 N to 12,000 N
Tool Shoulder Size	Between 10 mm and 25 mm

6. Metallurgical Evaluation Based on SEM Micrographs of FSW Joints

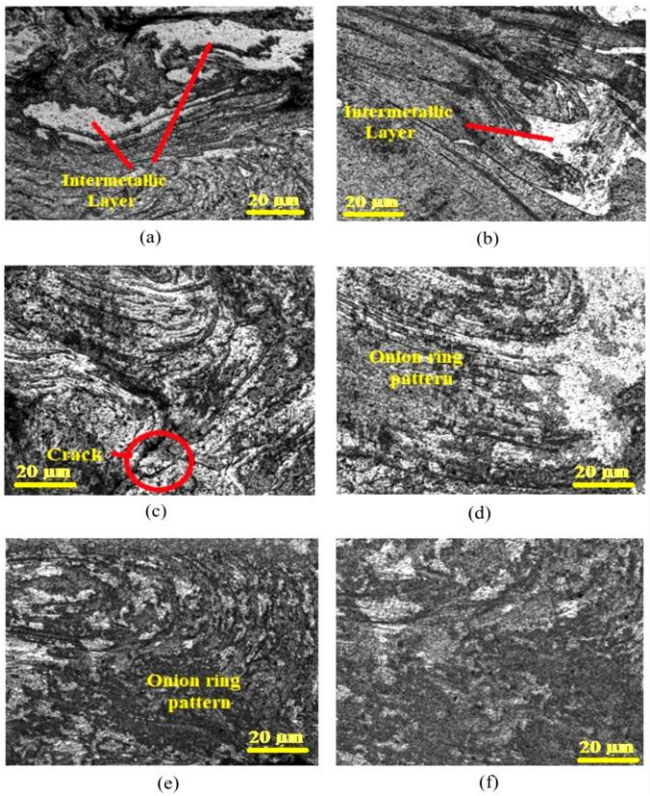

Fig.10: Scanning Electron Microscopy (SEM) images of the stir zone in Friction Stir Welded joints showing (a, b) intermetallic layer formation at the interface, (c) crack propagation in the weld region, (d, e) characteristic onion ring patterns indicating material flow and dynamic recrystallization, and (f) homogenized microstructure representing fine grain distribution in the nugget zone. All scale bars = 20 µm.[72]

Scanning Electron Microscopy (SEM) images provide critical insights into the metallurgical changes that occur during Friction Stir Welding (FSW). In images (a) and (b), a distinct intermetallic layer can be observed at the weld interface, marked by red arrows. This layer forms due to the diffusion of alloying elements between dissimilar metals, a typical phenomenon in welding processes involving materials like aluminium-steel or aluminium-copper. Although intermetallic compounds (IMCs) promote bonding, excessive growth can cause brittleness and weaken the joint. Thus, optimizing welding parameters is essential to limit intermetallic thickness and maintain mechanical strength. Image (c) reveals a micro crack in the stir zone, highlighted by a red circle. Such defects may arise from thermal stresses, insufficient material flow, or tool degradation, indicating potential weak spots that could lead to early failure under stress. To prevent these issues, refining process settings, enhancing tool geometry, or applying post-weld heat treatments may be necessary to reduce residual stresses. The "onion ring" pattern visible in images (d) and (e) is a hallmark of successful FSW. These concentric rings form due to the cyclical material flow around the rotating tool, signifying proper mixing and grain refinement. Typically, such patterns correlate with improved mechanical properties, including higher tensile strength and hardness, resulting from dynamic recrystallization during welding.
Image (f) displays a defect-free, uniform microstructure, likely from the thermomechanically affected zone (TMAZ) or nugget zone. Here, severe plastic deformation and high temperatures produce fine, equiaxed grains, leading to a homogenized structure. This microstructural enhancement boosts ductility and toughness, making the region ideal for structural applications.
In summary, SEM analysis reveals vital aspects of FSW: managing intermetallic formation prevents brittleness in dissimilar joints, crack detection underscores the need for precise process control, onion ring patterns confirm effective material flow, and uniform microstructures in the nugget zone indicate superior mechanical performance. These observations highlight how optimized welding parameters and microstructural evolution contribute to high-integrity FSW joints.

7. Defect Formation in Similar/Dissimilar FSW: Parametric Dependencies

Friction stir weld quality in dissimilar joints is critically governed by process-induced defects arising from thermomechanical imbalances. Primary defects—including tunnel voids, flash expulsion, hooking, wormholes, surface grooves, and linear cracking—exhibit distinct parametric dependencies as illustrated in Fig. 11. Tunnel defects and cavities (Fig.11a) stem from insufficient heat input and inadequate material stirring, impeding vertical consolidation. Grooves and wormholes (Fig. 11 b), prevalent under low rotational speeds coupled with high traverse rates, degrade tensile strength through stress concentration. Linear cracking (Fig. 11 c-d) manifests beneath tool shoulders in dissimilar pairs due to mismatched thermal expansion and improper plunge depth-tilt angle synergy. Root defects emerge from incomplete material flow, while nugget zone grooves correlate with insufficient pin depth in flat-shoulder tools. Crucially, tilt angle deviations beyond 1-3° induce cracking through insufficient forging pressure, and incorrect ω/v ratios cause either tunnel defects (low heat) or flash (excessive heat). Defect mitigation thus necessitates strict optimization of the interdependent triad: rotational speed (heat generation), traverse rate (material transport), and tool geometry constraints (tilt angle, plunge depth).

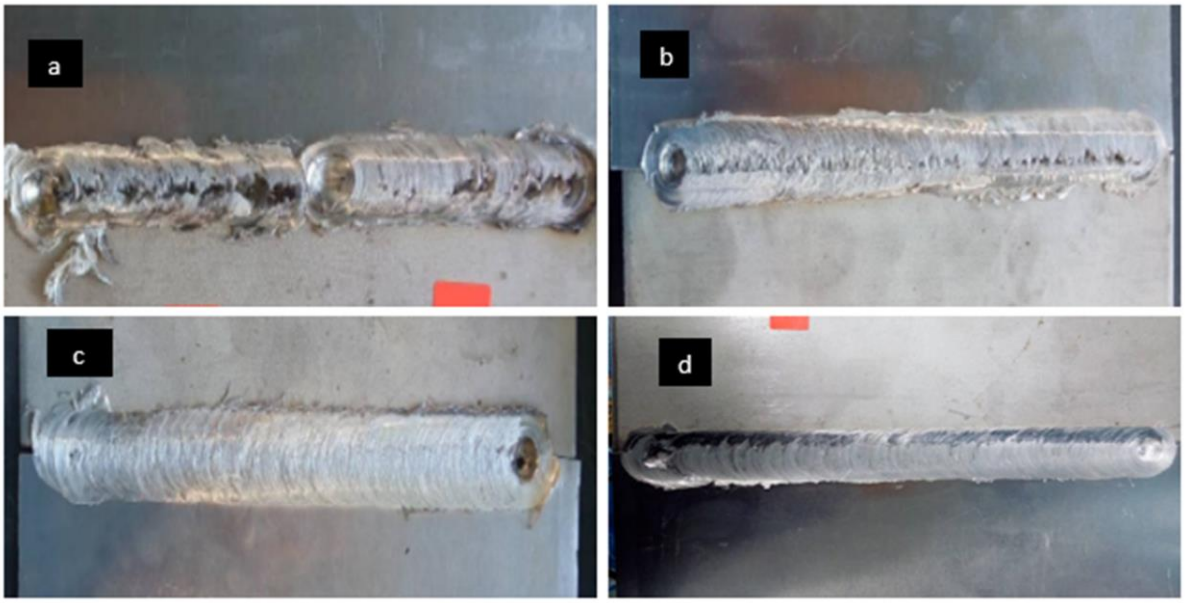

Fig. 11: Characteristic FSW defects: (a) Subsurface tunnel cavity (inadequate material consolidation), (b) Weld-line groove (insufficient forging), (c-d) Linear root cracks (tilt-plunge mismatch)[73]

Table 4: Root Cause Analysis

Defect Type	Primary Drivers	Material Consequence
Root defects	Inadequate heat input, incomplete flow	Unconsolidated interface
Nugget zone grooves	Insufficient pin depth with flat shoulder	Localized stress risers
Linear cracking	Incorrect plunge depth-tilt angle ratio	Brittle fracture propagation

8. Conclusion

Friction Stir Welding (FSW) stands as a rapidly developing and widely adopted solid-state joining technique, offering a cost-effective and technically superior alternative to conventional fusion welding. Its significance lies particularly in joining thermally conductive materials and alloys traditionally deemed difficult to weld, such as titanium, aluminium, magnesium, etc. Key advantages include significantly reduced distortion as well as residual stress, alongside enhanced mechanical qualities such tensile strength, fracture toughness, ductility, and hardness in the weld zone. While Numerous studies and marketing initiatives have established for lower melting point materials like aluminium alloys, substantial potential exists for its application to high melting temperature materials and, crucially, for producing both comparable and welds. Achieving optimal process and product outcomes needs caution optimization of identified parameters—including tool geometry, traversal speed, rotating speed and material selection However, successful implementation necessitates meticulous consideration of inherent process and material nonlinearities.

As environmentally favourable ("green") technology, FSW holds substantial promise for large-scale implementation across diverse sectors, like, aerospace, ship building, marine and automotive applications. Its unique capabilities position FSW not only to enhance current product performance and reliability but also to enable innovative design approaches previously constrained by joining limitation.

Acknowledgement

The authors would like to thank guide, Dr. Vijay Kumar Pandey, for his valuable guidance and feedback on this manuscript. and also appreciate the support from Department of Mechanical Engineering, Vivekananda Global University, Jaipur, Rajasthan during this research.

Disclosure statement

No potential conflict of interest was reported by the author. Funding There is no funding received for carrying out this research work.

Funding

There is no funding is received for carrying out this research work.

References

[1] Kutz, M. (2006). Materials and Mechanical Design. John Wiley & Sons.
[2] Norrish, J. (2006). Welding automation and robotics. In Advanced Welding Processes, 218–246. Elsevier. https://doi.org/10.1533/9781845691707.218
[3] Ng, M. C.-H., and S. N. Yahaya. (2017). Reviews on aluminum alloy series and its applications. Academic Journal of Scientific Research 5(12): 708–716. https://doi.org/10.15413/ajsr.2017.0724
[4] Joel, J., and M. Anthony Xavior. (2018). Aluminium alloy composites and its machinability studies; a review. Materials Today: Proceedings 5(5): 13556–13562. https://doi.org/10.1016/j.matpr.2018.02.351

[5] Kwee, I., W. De Waele, and K. Faes. (2019). Weldability of high-strength aluminium alloy EN AW-7475-T761 sheets for aerospace applications, using refill friction stir spot welding. Welding World 63(4): 1001–1011. https://doi.org/10.1007/s40194-019-00732-1

[6] Grimm, A., et al. (2015). Friction stir welding of light metals for industrial applications. Materials Today: Proceedings 2: S169–S178. https://doi.org/10.1016/j.matpr.2015.05.007

[7] Kou, S. (2002). Welding Metallurgy. Wiley. https://doi.org/10.1002/0471434027

[8] Mishra, R. S., and Z. Y. Ma. (2005). Friction stir welding and processing. Materials Science and Engineering: R: Reports 50(1–2): 1–78. https://doi.org/10.1016/j.mser.2005.07.001

[9] Threadgill, P. L., A. J. Leonard, H. R. Shercliff, and P. J. Withers. (2009). Friction stir welding of aluminium alloys. International Materials Reviews 54(2): 49–93. https://doi.org/10.1179/174328009X411136

[10] Chen, Y., H. Li, X. Wang, H. Ding, and F. Zhang. (2019). A comparative investigation on conventional and stationary shoulder friction stir welding of Al-7075 butt-lap structure. Metals 9(12): 1264. https://doi.org/10.3390/met9121264

[11] Vilaça, P., and W. Thomas. (2011). Friction stir welding technology. In Springer Series in Advanced Manufacturing, 85–124. https://doi.org/10.1007/8611_2011_56

[12] Aher, A. B., V. K. Pandey, and M. B. Shirke. (2024). Intelligent systems and applications in engineering: a review analysis of geometries, welding parameters, and materials used in friction stir welding.

[13] Khalaf, H. I., R. Al-Sabur, M. E. Abdullah, A. Kubit, and H. A. Derazkola. (2022). Effects of underwater friction stir welding heat generation on residual stress of AA6068-T6 aluminum alloy. Materials 15(6): 2223. https://doi.org/10.3390/ma15062223

[14] Subramanya, P., M. Amar, S. Arun, H. Mervin, and R. Shrikantha. (2018). Friction stir welding of aluminium matrix composites – a review. MATEC Web of Conferences 144: 03002. https://doi.org/10.1051/matecconf/201814403002

[15] Cabrini, M., et al. (2020). Stress corrosion cracking of friction stir-welded AA-2024 T3 alloy. Materials 13(11): 2610. https://doi.org/10.3390/ma13112610

[16] Prabhakar, D. A. P., et al. (2022). A comprehensive review of friction stir techniques in structural materials and alloys: challenges and trends. Journal of Materials Research and Technology 20: 3025–3060. https://doi.org/10.1016/j.jmrt.2022.08.034

[17] Anand, A. K. A. (2013). Welding processes in marine applications: a review. 2(1).

[18] Cooper, D. R., and J. M. Allwood. (2014). The influence of deformation conditions in solid-state aluminium welding processes on the resulting weld strength. Journal of Materials Processing Technology 214(11): 2576–2592. https://doi.org/10.1016/j.jmatprotec.2014.04.018

[19] D. A., Q. G. W., L. G. Sanchez, G. de Salazar J. M., and C. Portal A. J. (2018). Welding by hot forging of two carbon steels for the manufacture of Spanish and Japanese weapons. Journal of Materials Science and Engineering 7(2). https://doi.org/10.4172/2169-0022.1000446

[20] Durdanović, M. B., M. M. Mijajlović, D. S. Milčić, and D. S. Stamenković. (2009). Heat generation during friction stir welding process. Tribology in Industry 31(1–2): 8–14.

[21] Verma, S., Kumar, V., Kumar, R., and Sidhu, R. S. (2022). Exploring the application domain of friction stir welding in aluminum and other alloys. Materials Today: Proceedings, 50, 1032–1042. https://doi.org/10.1016/j.matpr.2021.07.449.

[22] Kallee, S. W. (2010). Industrial applications of friction stir welding. In Friction Stir Welding (pp. 118–163). Elsevier. https://doi.org/10.1533/9781845697716.1.118.

[23] ESAB. (n.d.). Friction stir welding – the ESAB way.

[24] Sergeeva, E. V. (2013). Friction stir welding in aerospace industry (Review). Paton Welding Journal, 5, 56–60.

[25] Srubar, M. (2021). Application of friction stir welding in aircraft structures. Applied Friction Stir Welding in Aircraft Structures.

[26] Khan, K. Z., and Siddiquee, A. N. (n.d.). Friction stir welding: Dissimilar aluminium alloys.

[27] Bhardwaj, N., Narayanan, R. G., Dixit, U. S., and Hashmi, M. S. J. (2019). Recent developments in friction stir welding and resulting industrial practices. Advances in Materials and Processing Technologies, 5(3), 461–496. https://doi.org/10.1080/2374068X.2019.1631065.

[28] Kusuda, Y. (2013). Honda develops robotized FSW technology to weld steel and aluminum and applied it to a mass-production vehicle. Industrial Robot: An International Journal, 40(3), 208–212. https://doi.org/10.1108/01439911311309889.

[29] Singh, K., Singh, G., and Singh, H. (2023). The influence of holding time on the characteristics of friction stir welded dissimilar magnesium alloy joints during post welding heat treatment. Proceedings of the Institution of Mechanical Engineers, Part L: Journal of Materials: Design and Applications, 237(1), 170–182. https://doi.org/10.1177/14644207221106576.

[30] Amini, A., Asadi, P., and Zolghadr, P. (2014). Friction stir welding applications in industry. In Advances in Friction-Stir Welding and Processing (pp. 671–722). Elsevier. https://doi.org/10.1533/9780857094551.671.

[31] Mahoney, W. H. B., Rhodes, C. G., Flintoff, J. G., and Mishra, R. A. S. M. W. (1998). Properties of friction-stir-welded 7075 T651 aluminum. Metallurgical and Materials Transactions A, 29, 1955–1964.

[32] Goloborodko, A., Ito, T., Yun, X., Motohashi, Y., and Itoh, G. (2004). Friction stir welding of a commercial 7075-T6 aluminum alloy: Grain refinement, thermal stability and tensile properties. Materials Transactions, 45(8), 2503–2508. https://doi.org/10.2320/matertrans.45.2503.

[33] Shah, S. T. Sarang. (2012). Friction stir welding: Current state of the art and future prospects.

[34] dos Santos, J. F., et al. (2018). Understanding precipitate evolution during friction stir welding of Al-Zn-Mg-Cu alloy through in-situ measurement coupled with simulation. Acta Materialia, 148, 163–172. https://doi.org/10.1016/j.actamat.2018.01.020.

[35] Mendes, N., Neto, P., Simão, M. A., Loureiro, A., and Pires, J. N. (2016). A novel friction stir welding robotic platform: Welding polymeric materials. International Journal of Advanced Manufacturing Technology, 85(1–4), 37–46. https://doi.org/10.1007/s00170-014-6024-z.

[36] Albannai, A. (2020). Review the common defects in friction stir welding. International Journal of Scientific and Technology Research, 9(11), 318–329.

[37] Guo, J., Gougeon, P., and Chen, X.-G. (2012). Microstructure evolution and mechanical properties of dissimilar friction stir welded joints between AA1100-B4C MMC and AA6063 alloy. Materials Science and Engineering A, 553, 149–156. https://doi.org/10.1016/j.msea.2012.06.004.

[38] Thomas, W. M., Johnson, K. I., and Wiesner, C. S. (2003). Friction stir welding – Recent developments in tool and process technologies. Advanced Engineering Materials, 5(7), 485–490. https://doi.org/10.1002/adem.200300355.

[39] Liu, H. J., Zhou, L., Huang, Y. X., and Liu, Q. W. (2010). Study of the key issues of friction stir welding of titanium alloy. Materials Science Forum, 638–642, 1185–1190. https://doi.org/10.4028/www.scientific.net/MSF.638-642.1185.

[40] Strand, S. (2003). Joining plastics – can friction stir welding compete? In Proceedings: Electrical Insulation Conference and Electrical Manufacturing and Coil Winding Technology Conference (Cat. No.03CH37480), IEEE, 321–326. https://doi.org/10.1109/EICEMC.2003.1247904.

[41] Qasim, A. W., Doos, M., and Bashar (2012) Experimental study of friction stir welding of 6061-T6 aluminum pipe. International Journal of Mechanical Engineering and Robotics Research, 1(3), 143–156.

[42] Campanelli, S., Casalino, G., Casavola, C., and Moramarco, V. (2013) Analysis and comparison of friction stir welding and laser assisted friction stir welding of aluminum alloy. Materials (Basel), 6(12), 5923–5941. https://doi.org/10.3390/ma6125923.

[43] Singh, K., Singh, G., and Singh, H. (2019) Investigation on the microstructure and mechanical properties of a dissimilar friction stir welded joint of magnesium alloys. Proceedings of the Institution of Mechanical Engineers, Part L: Journal of Materials: Design and Applications, 233(12), 2444–2454. https://doi.org/10.1177/1464420719865292.

[44] Park, J. C., and Kim, S. J. (2010) The effect of traveling and rotation speeds on mechanical properties during friction stir welding of dissimilar Al alloys. Defect and Diffusion Forum, 297–301, 590–595. https://doi.org/10.4028/www.scientific.net/DDF.297-301.590.

[45] Park, S.-K., Hong, S.-T., Park, J.-H., Park, K.-Y., Kwon, Y.-J., and Son, H.-J. (2010) Effect of material locations on properties of friction stir welding joints of dissimilar aluminium alloys. Science and Technology of Welding and Joining, 15(4), 331–336. https://doi.org/10.1179/136217110X12714217309696.

[46] Cakan, A., Ugurlu, M., and Kaygusuz, E. (2019) Effect of weld parameters on the microstructure and mechanical properties of dissimilar friction stir joints between pure copper and the aluminum alloy AA7075-T6. Materials Testing, 61(2), 142–148. https://doi.org/10.3139/120.111297.

[47] Wang, T., Feng, Z., and Wang, R. (2022) Study on friction stir welding and heat treatment of 7050 aluminum alloy. In Proceedings, 196–202. https://doi.org/10.1007/978-981-19-1309-9_20.
[48] Su, M., Qi, X., Xu, L., Feng, Q., Han, Y., and Zhao, L. (2022) Microstructural and mechanical analysis of 6063-T6 aluminum alloy joints bonded by friction stir welding. Journal of Materials Science, 57(31), 15078–15093. https://doi.org/10.1007/s10853-022-07541-w.
[49] Hunt, J. B., Mazzeo, B. A., Sorensen, C. D., and Hovanski, Y. (2022) A generalized method for in-process defect detection in friction stir welding. Journal of Manufacturing and Materials Processing, 6(4), 80. https://doi.org/10.3390/jmmp6040080.
[50] Singh, K., Singh, G., and Singh, H. (2021) Influence of post welding heat treatment on the microstructure and mechanical properties of friction stir welding joint of AZ31 Mg alloy. Proceedings of the Institution of Mechanical Engineers, Part E: Journal of Process Mechanical Engineering, 235(5), 1375–1382. https://doi.org/10.1177/0954408921997626.
[51] Kaygusuz, E., Karaömerlioğlu, F., and Akıncı, S. (2023) A review of friction stir welding parameters, process and application fields. Turkish Journal of Engineering, 7(4), 286–295. https://doi.org/10.31127/tuje.1107210.
[52] Gibson, B. T., et al. (2014) Friction stir welding: Process, automation, and control. Journal of Manufacturing Processes, 16(1), 56–73. https://doi.org/10.1016/j.jmapro.2013.04.002.
[53] He, X., Gu, F., and Ball, A. (2014) A review of numerical analysis of friction stir welding. Progress in Materials Science, 65, 1–66. https://doi.org/10.1016/j.pmatsci.2014.03.003.
[54] Elangovan, K., and Balasubramanian, V. (2008) Influences of tool pin profile and tool shoulder diameter on the formation of friction stir processing zone in AA6061 aluminium alloy. Materials and Design, 29(2), 362–373. https://doi.org/10.1016/j.matdes.2007.01.030.
[55] Hassanifard, S., Ghiasvand, A., Hashemi, S. M., and Varvani-Farahani, A. (2022) The effect of the friction stir welding tool shape on tensile properties of welded Al 6061-T6 joints. Materials Today Communications, 31, 103457. https://doi.org/10.1016/j.mtcomm.2022.103457.
[56] Liu, F. C., and Ma, Z. Y. (2008) Influence of tool dimension and welding parameters on microstructure and mechanical properties of friction-stir-welded 6061-T651 aluminum alloy. Metallurgical and Materials Transactions A, 39(10), 2378–2388. https://doi.org/10.1007/s11661-008-9586-2.
[57] Zhao, Y.-H., Lin, S.-B., Qu, F.-X., and Wu, L. (2006) Influence of pin geometry on material flow in friction stir welding process. Materials Science and Technology, 22(1), 45–50. https://doi.org/10.1179/174328406X78424.
[58] Elangovan, K., and Balasubramanian, V. (2008) Influences of tool pin profile and welding speed on the formation of friction stir processing zone in AA2219 aluminium alloy. Journal of Materials Processing Technology, 200(1–3), 163–175. https://doi.org/10.1016/j.jmatprotec.2007.09.019.
[59] Scialpi, A., De Filippis, L. A. C., and Cavaliere, P. (2007) Influence of shoulder geometry on microstructure and mechanical properties of friction stir welded 6082 aluminium alloy. Materials and Design, 28(4), 1124–1129. https://doi.org/10.1016/j.matdes.2006.01.031.
[60] Muthu, M. F. X., and Jayabalan, V. (2016) Effect of pin profile and process parameters on microstructure and mechanical properties of friction stir welded Al–Cu joints. Transactions of Nonferrous Metals Society of China, 26(4), 984–993. https://doi.org/10.1016/S1003-6326(16)64195-X.
[61] Sorensen, B., and C. Nielsen. (n.d.). Exploring geometry effects for convex scrolled shoulder, step spiral probe FSW tools. Mater. Soc. Annu. Meet., 85–92.
[62] Azimzadegan, T., and S. Serajzadeh. (2010). An investigation into microstructures and mechanical properties of AA7075-T6 during friction stir welding at relatively high rotational speeds. Journal of Materials Engineering and Performance 19 (9): 1256–1263. https://doi.org/10.1007/s11665-010-9625-1.
[63] Dinaharan, I., and N. Murugan. (2012). Effect of friction stir welding on microstructure, mechanical and wear properties of AA6061/ZrB2 in situ cast composites. Materials Science and Engineering A 543: 257–266. https://doi.org/10.1016/j.msea.2012.02.085.
[64] Heidarzadeh, A., H. Khodaverdizadeh, A. Mahmoudi, and E. Nazari. (2012). Tensile behavior of friction stir welded AA 6061-T4 aluminum alloy joints. Materials and Design 37: 166–173. https://doi.org/10.1016/j.matdes.2011.12.022.
[65] Suresha, C. N., B. M. Rajaprakash, and S. Upadhya. (2011). A study of the effect of tool pin profiles on tensile strength of welded joints produced using friction stir welding process. Materials and Manufacturing Processes 26 (9): 1111–1116. https://doi.org/10.1080/10426914.2010.532527.
[66] Sorger, G., H. Wang, P. Vilaça, and T. G. Santos. (2017). FSW of aluminum AA5754 to steel DX54 with innovative overlap joint. Welding World 61 (2): 257–268. https://doi.org/10.1007/s40194-016-0412-y.
[67] Wei, Y., J. Li, J. Xiong, F. Huang, F. Zhang, and S. H. Raza. (2012). Joining aluminum to titanium alloy by friction stir lap welding with cutting pin. Materials Characterization 71: 1–5. https://doi.org/10.1016/j.matchar.2012.05.013.
[68] Liu, H., H. Zhang, Y. Huang, and L. Yu. (2010). Mechanical properties of underwater friction stir welded 2219 aluminum alloy. Transactions of Nonferrous Metals Society of China 20 (8): 1387–1391. https://doi.org/10.1016/S1003-6326(09)60309-5.
[69] Krishnan, M. M., J. Maniraj, R. Deepak, and K. Anganan. (2018). Prediction of optimum welding parameters for FSW of aluminium alloys AA6063 and A319 using RSM and ANN. Materials Today: Proceedings 5 (1): 716–723. https://doi.org/10.1016/j.matpr.2017.11.138.
[70] Shultz, E. F., E. G. Cole, C. B. Smith, M. R. Zinn, N. J. Ferrier, and F. E. Pfefferkorn. (2010). Effect of compliance and travel angle on friction stir welding with gaps. Journal of Manufacturing Science and Engineering 132 (4). https://doi.org/10.1115/1.4001581.
[71] Ahmed, M. M. Z., S. Ataya, M. M. El-Sayed Seleman, H. R. Ammar, and E. Ahmed. (2017). Friction stir welding of similar and dissimilar AA7075 and AA5083. Journal of Materials Processing Technology 242: 77–91. https://doi.org/10.1016/j.jmatprotec.2016.11.024.
[72] Gadakh, S., and C. Nayak. (2025). Multi-response optimization of process parameters for weld performances during underwater friction-stir welding of dissimilar aluminum alloys AA6063-T6 and AA5083-H32. Journal of Adhesion Science and Technology 0 (0): 1–24. https://doi.org/10.1080/01694243.2025.2525995.
[73] Chitturi, V., S. Rao Pedapati, and M. Awang. (2019). A review on process parameters and their effects on dissimilar friction stir welding of aluminium and steel alloys. IOP Conference Series: Materials Science and Engineering 551 (1). https://doi.org/10.1088/1757-899X/551/1/012003.